Research Product 96-08

The Development of Structured Simulation-Based Training for Digital Forces: Initial Battalion Staff-Level Efforts

Beverly J. Winsch
BDM Federal, Inc.

Timothy H. Garth
PRC Inc.

Frances M. Ainslie
BDM Federal, Inc.

James D. Castleberry
Human Resources Research Organization

19961127 004

August 1996

Armored Forces Research Unit

U.S. Army Research Institute for the Behavioral and Social Sciences

Approved for public release; distribution is unlimited.

DTIC QUALITY INSPECTED 3

U.S. ARMY RESEARCH INSTITUTE
FOR THE BEHAVIORAL AND SOCIAL SCIENCES

A Field Operating Agency Under the Jurisdiction
of the Deputy Chief of Staff for Personnel

EDGAR M. JOHNSON
Director

Research accomplished under contract
for the Department of the Army

BDM Federal, Inc.

Technical review by

Carl Lickteig
William Parry

NOTICES

FINAL DISPOSITION: This Research Product may be destroyed when it is no longer needed. Please do not return it to the U.S. Army Research Institute for the Behavioral and Social Sciences.

NOTE: This Research Product is not to be construed as an official Department of the Army position, unless so designated by other authorized documents.

REPORT DOCUMENTATION PAGE

1. REPORT DATE	2. REPORT TYPE	3. DATES COVERED (from. . . to)
1996, August	Final	May 1995-April 1996

4. TITLE AND SUBTITLE	5a. CONTRACT OR GRANT NUMBER
The Development of Structured Simulation-Based Training for Digital Forces: Initial Battalion Staff-Level Efforts	MDA903-92-D-0075
	5b. PROGRAM ELEMENT NUMBER 0602785A
6. AUTHOR(S) Beverly J. Winsch (BDM), Timothy H. Garth (PRC), Frances M. Ainslie (BDM), and James D. Castleberry (HumRRO)	5c. PROJECT NUMBER A791
	5d. TASK NUMBER 2228
	5e. WORK UNIT NUMBER R01
7. PERFORMING ORGANIZATION NAME(S) AND ADDRESS(ES) BDM Federal, Inc. 1801 Randolph St., NE Albuquerque, NM 87106; PRC Inc. 1500 PRC Dr. McLean, VA 22102; Human Resources Research Organization (HumRRO) 66 Canal Center Plaza Suite 400 Alexandria, VA 22314	8. PERFORMING ORGANIZATION REPORT NUMBER
9. SPONSORING/MONITORING AGENCY NAME(S) AND ADDRESS(ES) U.S. Army Research Institute for the Behavioral and Social Sciences ATTN: PERI-RZ 5001 Eisenhower Avenue Alexandria, VA 22333-5600	10. MONITOR ACRONYM ARI
	11. MONITOR REPORT NUMBER Research Product 96-08

12. DISTRIBUTION/AVAILABILITY STATEMENT

Approved for public release; distribution is unlimited.

13. SUPPLEMENTARY NOTES

COR: Kathleen A. Quinkert

14. ABSTRACT *(Maximum 200 words)*:

New command, control, and communication technologies will affect soldier training requirements. Emerging training requirements for Army leaders include competency on a wider variety of tasks, the ability to exploit the capabilities of new technologies, and a clear understanding of digital tactics, techniques, and procedures. Examining these new training requirements now ensures Force XXI's readiness to face the challenges of the 21st century. The current effort, Simulation-Based Multiechelon Training Program for Armor Units-Digital (SIMUTA-D), contributes a first step toward solving some of the key training challenges faced by Force XXI. The SIMUTA-D program features Movement to Contact, Deliberate Attack, and Defense in Sector training support packages (TSPs) that support execution-focused, battalion task force staff training for the digitally equipped battlefield. An observer/controller team and an active unit participated in a series of pilot trials and a formative evaluation of the TSPs. This report focuses on SIMUTA-D's TSP development methods and the formative evaluation data. The data provide a host of lessons learned that should be of interest to future training developers. Suggestions for future training program development are offered.

15. SUBJECT TERMS

SIMNET; Janus; Structured training; Force XXI Training Program; Battalion Staff Training; Focused dispatch; Digital Command and Control; SIMUTA

SECURITY CLASSIFICATION OF			19. LIMITATION OF ABSTRACT	20. NUMBER OF PAGES	21. RESPONSIBLE PERSON (Name and Telephone Number)
16. REPORT	17. ABSTRACT	18. THIS PAGE			
Unclassified	Unclassified	Unclassified	Unlimited	95	

Research Product 96-08

The Development of Structured Simulation-Based Training for Digital Forces: Initial Battalion Staff-Level Efforts

Beverly J. Winsch
BDM Federal, Inc.

Timothy H. Garth
PRC Inc.

Frances M. Ainslie
BDM Federal, Inc.

James D. Castleberry
Human Resources Research Organization

Armored Forces Research Unit
Barbara A. Black, Chief

U.S. Army Research Institute for the Behavioral and Social Sciences
5001 Eisenhower Avenue, Alexandria, Virginia 22333-5600

Office, Deputy Chief of Staff for Personnel
Department of the Army

August 1996

Army Project Number
2O262785A791

Education and Training Technology

Approved for public release; distribution is unlimited.

FOREWORD

The Simulation-Based Multiechelon Training Program for Armor Units-Digital (SIMUTA-D) was funded by the Force XXI Training Program and sponsored by the Mounted Battlespace Battle Lab and the U.S. Army Research Institute for the Behavioral and Social Sciences' (ARI) Fort Knox Armored Forces Research Unit under Work Package 2228, FASTTRAIN, Force XXI Training Methods and Strategies. ARI's research on training requirements and evaluation methods is supported by a Memorandum of Agreement between the U.S. Army Armor Center and Fort Knox and ARI titled Manpower, Personnel and Training Research, Development, Test, and Evaluation for the Mounted Forces, 16 October 1995. SIMUTA-D contributes to the Army's readiness by providing training support packages (TSPs) designed to train battalion task force staff execution skills for the 21st century battlefield.

The SIMUTA-Battalion Exercise Expansion (SIMUTA-B) program TSPs served as a baseline for SIMUTA-D Movement to Contact, Defense in Sector, and Deliberate Attack TSPs that focus on training for the digitally equipped battlefield. The SIMUTA-D development process began with a front-end analysis of the training requirements associated with the use of the following automated command, control, and communications devices: the Intervehicular Information System (IVIS), the Brigade and Battalion Command and Control (B2C2) system, the All Sources Analysis System (ASAS), and the Improved Fire Support Automated System (IFSAS). The next step was developing draft TSPs organized around the structured training method. The SIMUTA-D TSPs then underwent a series of pilot trials conducted in Simulation Networking and Janus-Army (A). Finally, a formative evaluation (FE) of each TSP was conducted in Janus-A using observer/controllers as trainers and an active unit (Task Force 2-33 Armor) as role players. The TSPs were revised throughout the entire development process.

The FE data contained in the report provide guidance for conducting effective rehearsals and making improvements to the TSPs. In addition, the data show that the following are critical to the development of after action reviews that incorporate digital capabilities: digital device proficiency; established tactics, techniques, and procedures for the digitized battlefield; and the inclusion of automated data collection devices. Also contained in this report are lessons learned that center on programmatic coordination requirements, methods for ensuring successful TSP development, and suggestions for improving the implementation and evaluation of each TSP. Recommendations for program extension are also included.

The results of this effort provide training developers with useful information regarding the development, use, and evaluation of TSPs for the digitally equipped battlefield.

ZITA M. SIMUTIS
Deputy Director
(Science and Technology)

EDGAR M. JOHNSON
Director

ACKNOWLEDGMENTS

This report reflects the efforts of a team of military experts, training development personnel, research scientists, and simulation technology experts. The authors, who were the key personnel from the Formative Evaluation and Design/Development teams, were supported by a highly competent group of professionals. Mr. Robert S. Sever, BDM Project Director, led the Simulation-Based Multiechelon Training Program for Armor Units-Digital (SIMUTA-D) team. Other key persons included Mr. Ken Fergus (BDM), Mr. Al Cartwright (BDM), Mr. Jim Lewis (PRC), and Mr. Greg Martin (HumRRO) from the Design/Development team. Mr. Joe Cassidy (PRC) and Mr. Jeff Skilling (BDM) formed the Technical Support team. Ms. Linda Clark (BDM) and Ms. Danelle Wozniak (BDM) provided administrative support. Ms. Lori Bailey (BDM) and Ms. Diane Catanzaro (BDM) served as the graphic artists, producing all briefing slides for the effort.

Dr. Kathleen Quinkert of the Army Research Institute for the Behavioral and Social Sciences - Armored Forces Research Unit served as the Contracting Officer's Representative and guided these contractor efforts. LTC William Parry, Chief of the Battlefield Synchronization Division, served as the Mounted Battlespace Battle Lab representative. LTC Joseph Orr, Task Force 2-33 Commander, provided unit manpower support and offered many suggestions for training package improvements. The Observer/Controller team also played a significant role in ensuring the implementation of SIMUTA-D. Finally, thanks go to CPT Michael Spragg from the Mounted Battlespace Battle Lab who provided written and graphic materials depicting the digital device network. These materials were included in the SIMUTA-D training support packages and are enclosed in Appendix B of this report.

THE DEVELOPMENT OF STRUCTURED SIMULATION-BASED TRAINING FOR DIGITAL FORCES: INITIAL BATTALION STAFF-LEVEL EFFORTS

EXECUTIVE SUMMARY

Research Requirement:

Political changes and technology advances impact all aspects of today's military. The predictable environment of a forward deployed force preparing for a well-defined conflict with a Soviet-based threat no longer exists. Political changes call for a principally continental U.S.-based power-projection Army ready for broader missions in undeveloped theaters. In addition, today's Army is moving from a slow, well-controlled information environment to a high speed, technologically advanced environment with massive amounts of information available at all echelons. The Army must maintain a technological edge in order to win the information war and to overmatch adversaries. However, it cannot exploit advanced technologies unless it produces well-trained leaders and units ready to perform missions on the digitally equipped battlefield. It is expected that the digitized battlefield will offer a challenging environment where information distribution is rapid and accurate, situational awareness and survivability are increased, operation phases are conducted in parallel, and on-the-move decisions are commonplace. The training development efforts of the Simulation-Based Multiechelon Training Program for Armor Units (SIMUTA), together with the tactics, techniques, and procedure (TTP) work of the U.S. Army Armor Center 16th Cavalry Regiment and the Mounted Battlespace Battle Lab, provided an opportunity to implement and evaluate innovative structured training techniques for active forces operating on the digitally-equipped battlefield in a program named the Simulation-Based Multiechelon Training Program for Armor Units - Digital (SIMUTA-D). The SIMUTA-D effort combined training development and research activities to investigate the adequacy of materials developed to support structured training for the 21st Century battlefield.

Procedure:

Movement to Contact, Deliberate Attack, and Defense in Sector training support packages (TSPs) from the SIMUTA-Battalion Exercise Expansion training program served as the starting point for SIMUTA-D's digitization effort. The procedure began with a front-end analysis of the training requirements associated with the use of automated command, control, and communication (C3) devices for use by a battalion task force (BN/TF). The next step was developing draft TSPs featuring the structured training method used under the SIMUTA programs. Structured training provides the training unit with prewritten orders and maneuvers on terrain with predrawn graphics. The opposing forces are set and have instructions to allow the unit to respond in a manner that is observable by observer/controllers (O/Cs). The SIMUTA-D TSPs then underwent a series of pilot trials conducted in Simulation Networking and Janus-Army (A). A formative evaluation (FE) of each TSP was conducted in Janus-A using O/Cs as trainers and an active unit (Task Force 2-33 Armor) as role players.

Findings:

The FE data point to areas of needed improvement for the TSPs, highlight the value of conducting a FE, and illustrate the challenges of digital device training. Much of the FE data consist of O/C and BN/TF training evaluation questionnaire ratings and comments. The O/Cs identified areas where the TSPs needed more detail and indicated a need for additional digital device operation training. Areas critical to the development of after action reviews (AARs) that incorporate digital capabilities include O/C digital device proficiency, established TTPs for the digitized battlefield, and the inclusion of automated data collection devices. Most BN/TF members agreed that the scenario materials included in the TSPs provide the necessary information to execute each mission order. Overall, the BN/TF data provide guidance for the conduct of effective rehearsals and highlight possible improvements to the TSPs and the AAR process. As with the O/C data, the BN/TF questionnaire data highlight the importance of establishing TTPs for the digitized battlefield and reflect the importance of digital device training for the O/Cs. All of these factors influenced the effectiveness of O/C coaching and the AAR process. Lessons learned from the overall effort center on programmatic coordination requirements, methods for ensuring successful TSP development, and suggestions for improving the implementation and evaluation of each TSP.

Utilization of Findings:

The results of this effort provide important input regarding the training requirements of BN/TF staffs operating automated C3 systems. These results also provide training developers with useful information regarding the development, use, and evaluation of TSPs for the digitally equipped battlefield. Thus, the SIMUTA-D effort serves as a first step towards providing Force XXI with structured TSPs for the digitally equipped battlefield and provides future developers with an example for further development.

THE DEVELOPMENT OF STRUCTURED SIMULATION-BASED TRAINING FOR DIGITAL FORCES: INITIAL BATTALION STAFF-LEVEL EFFORTS

CONTENTS

Page

INTRODUCTION 1

Force XXI Initiatives for the Digitized Battlefield 1
Emerging Tactics, Techniques, and Procedures 4
Impacts of the Digitized Battlefield 4
Response to Training Challenges 6
The SIMUTA-D Program 7
Structured Training 11
Organization of the Report 16

DIGITAL DEVELOPMENT METHOD 16

Training Support Package Design and Development 16
Training Support Package Pilot and Formative Evaluation Trials 22

RESULTS AND DISCUSSION 33

Major Findings 33
Lessons Learned 44
Program Extensions 51

CONCLUSIONS 53

Train the Trainers and Give Them the Necessary Tools 54
Digitization Changes Task Procedures More Than it Creates New Collective Tasks 55
The Evaluation Process Pays Off and Should Be Expanded 55

REFERENCES 57

APPENDIX A. ACRONYMS A-1

B. THE SIMUTA-DEVICE NETWORK B-1

C. TASK FORCE AND OBSERVER/CONTROLLER TRAINING EVALUATION QUESTIONNAIRE DATA C-1

D. RATIONALES FOR OBSERVER/CONTROLLER AND TASK FORCE RECOMMENDATIONS NOT IMPLEMENTED D-1

Page

LIST OF TABLES

Table 1. Selected Training Lessons Learned From the Combat Vehicle Command and Control Program Relevant to Force XXI 6

2. Development Phases for Simulation-Based Training Exercises and Their Outcomes 13

3. Event Outline Crosswalk 14

4. Comparison of TRADOC Regulation 350-70 and SIMUTA-D Training Support Packages 15

5. Exemplar Task Crosswalk Between the FKSM 71-2 MTP and the SIMUTA-D Observation Forms 17

6. The Training Support Package Design/Development Process 18

7. Model for Conducting Training Support Package Trials 23

8. Actual Training Events by Trial Level, Mission, and Simulation 27

9. O/C Comments for Improving the Training Missions and Implementation Decisions 38

10. Rehearsal Methods Employed During the Formative Evaluation 39

11. Task Force Comments for Improving the Training Missions and Implementation Decisions 42

12. Major Conclusions for SIMUTA-D 54

LIST OF FIGURES

Figure 1. The three axes of Force XXI 2

2. Key aspects of training approaches requiring further review 5

3. The SIMUTA-D technologies, products, and mission focus 9

4. An excerpt from the S2 Observation Form for the Defense in Sector mission 21

Page

LIST OF FIGURES (Continued)

Figure 5. An excerpt from the Unit Training Evaluation Questionnaire 25

6. An excerpt from the Formative Evaluation Observation Form 26

7. The device and staffing configuration for Janus-A workstations 29

8. The command post staffing structure 30

9. The Level 4 staffing requirements 31

10. The Level 4 trials schedule 32

THE DEVELOPMENT OF STRUCTURED SIMULATION-BASED TRAINING FOR DIGITAL FORCES: INITIAL BATTALION STAFF-LEVEL EFFORTS

Introduction

Political changes and technology advances impact all aspects of today's military. The predictable environment of a forward deployed force preparing for a well-defined conflict with a Soviet-based threat no longer exists. Political changes call for a principally continental U.S.-based power-projection Army ready for broader missions in undeveloped theaters. In addition, technology advances have moved today's Army from a slow, well controlled information environment to a high speed, technologically advanced environment with massive amounts of information available at all echelons.

The Army must maintain a technological edge in order to win the information war and continue to overmatch adversaries. However, to fully exploit advanced technologies, the Army needs well-trained leaders and units ready to perform missions on the digitized battlefield. The Army Digitization Office (ADO) defines the digitized battlefield as the application of information technologies to acquire, exchange, and employ timely digital information throughout the battlespace (U. S. ADO, 1995). The digitized battlefield will offer a challenging environment where information distribution is rapid and accurate, situational awareness and survivability are increased, operation phases are conducted in parallel, and on-the-move decisions are commonplace. The Army of the 21st Century must meet these challenges.

The Army is meeting these challenges with the reorganization and modernization of its forces through Force XXI, a concept for the evolution of full-dimensional operations for the Army of the early 21st Century described in Training and Doctrine Command (TRADOC) Pamphlet 525-5 (U.S. Army TRADOC, 1994). In constructing the vision for the future, the Army emphasizes increased situational awareness through technology and the limitless application of information technology. This report documents one program developed in response to these challenges, the Simulation-Based Multiechelon Training Program for Armor Units-Digital (SIMUTA-D). The SIMUTA-D contributes to the Army's modernization efforts under the Force XXI training concept by providing a set of structured training support packages (TSPs)[1] for application on the digitized battlefield. In order to situate the SIMUTA-D program in the Army's overall modernization program, the following sections discuss some major issues related to Force XXI, beginning with a discussion of Force XXI's key initiatives for the digitized battlefield.

Force XXI Initiatives for the Digitized Battlefield

The current Chief of Staff of the Army, General Dennis Reimer, sees readiness for the changes in modern warfare as a prime challenge of today's Army. The mechanism for achieving

[1] The SIMUTA-D TSPs meet the definition for TSP content as specified in TRADOC Regulation 350-70 (U.S. Army TRADOC, 1996). See Table 3 for more details.

this objective is Force XXI. A high priority is defining Force XXI in terms of doctrine and providing soldiers with optimal organization, training, and equipment. To do this, the Army needs a trained, capable force ready to harness the capabilities of emerging technology and to exploit them on the battlefield. Essential to this effort is the intelligent use of new weapon systems, employed through a seamless information system (Reimer, 1995).

Force XXI uses a variety of tools to achieve its goals, organized around the three axes shown in Figure 1: (a) the Table of Distribution and Allowances/Institutional Army axis, (b) the Joint Venture axis, and (c) the ADO axis. The Joint Venture axis is the main axis for Force XXI and relates most closely to the current effort, accounting for the concept and design of the operating force. Under Force XXI, the redesign of operational forces is the charge of the Joint Venture initiative, led and coordinated by the Commanding General, TRADOC. Joint Venture institutionalizes the Battle Labs Program which unites Army combat developers, materiel developers, and testers in an integrated approach to the development and evaluation of changing battlefield dynamics (U.S. Army TRADOC, 1995b).

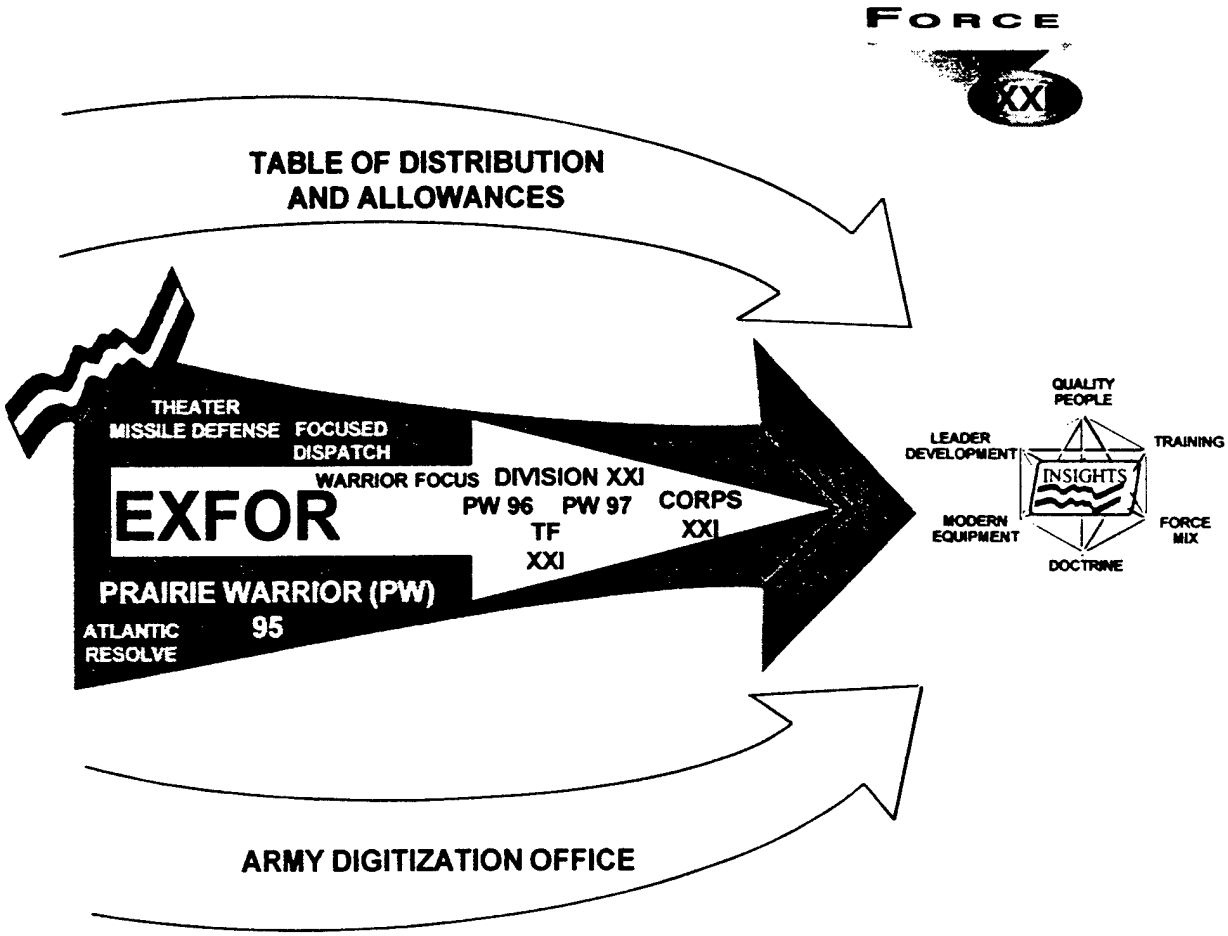

Figure 1. The three axes of Force XXI (adapted from personal communication W. H. Parry, March 13, 1995).

Joint Venture employs warfighting experiments as a primary tool for appraising critical operational requirements associated with changing battlefield dynamics. These experiments employ a mix of constructive, virtual, and live simulations, involving field soldiers and units in relevant, tactically competitive scenarios (U.S. Army TRADOC, 1995b). Experiments which entail changes across the domains of doctrine, training, leaders, organizations, materiel, and soldiers (DTLOMS), are termed Advanced Warfighting Experiments, or AWEs. While several AWEs were conducted under the auspices of the Battle Labs Program prior to the inception of Joint Venture, Joint Venture now serves as the organizing force behind the AWEs.

The Joint Venture strategic objective, as described in the Joint Venture Campaign Plan (U. S. Army TRADOC, 1995a), simultaneously addresses Force XXI hypotheses across the DTLOMS. Joint Venture has three primary phases: (a) Phase 1: Early Experimentation, (b) Phase 2: Force Design, and (c) Phase 3: Fielding and Refinement. Each phase's priorities appear below.

1. Early Experimentation: Improve lethality, survivability, and tempo through design of an operating force that is knowledge-based, modular, and tailorable in capability (p. 8).

2. Force Design: Exploit live, virtual, and constructive simulations to experiment with progressively larger Force XXI echelons in realistic synthetic theaters of war. . . Phase 2 begins with results and analysis for the Task Force XXI AWE and concludes with design decisions following the Corps XXI AWE (p. 27).

3. Fielding and Refinement: Recommend refinements to the Army investment strategies for both research and development based on operational experiences and experimentation results (p. 33).

A Joint Venture AWE with particular relevance to the SIMUTA-D effort is Focused Dispatch. From September 1994 through August 1995, Focused Dispatch evaluated the processes and functions of digital connectivity among: (a) fire support (FS); (b) intelligence; (c) combat service support (CSS); and (d) command, control, and communication (C3) systems in a mounted battalion task force (BN/TF). In October 1994, General Franks, Commanding General, TRADOC directed experimentation to include all Battlefield Operating Systems (BOSs) at BN/TF level; thus, air defense artillery, engineers, and maneuver elements were included. Focused Dispatch employed digital systems at each of the BOSs; though, only two of the systems could share information (i.e., the Brigade and Battalion Command and Control [B2C2] and the Intervehicular Information System [IVIS]). All systems operated across BOSs either by design or as evolved during the AWE. For example, the B2C2 system operated primarily as a CSS system at BN/TF and brigade levels and as a command and control (C2) system at brigade level. Vertical linkages of the BOSs afforded fast communication and a common picture of the battlefield. Focused Dispatch was conducted by the Mounted Battlespace Battle Lab (MBBL) with Task Force (TF) 2-33 Armor (16th Cavalry Regiment) as the experimental unit. The U.S. Army Armor Center and School and all other TRADOC proponents provided additional support and forces. The SIMUTA-D was initiated to augment the AWE Focused Dispatch effort. Key to the implementation of Focused Dispatch and SIMUTA-D was the incorporation of new tactics,

techniques, and procedures (TTPs) designed to address the changes envisioned under Force XXI for each of the DTLOMS. The following two sections examine the role of evolving TTPs more closely.

Emerging Tactics, Techniques, and Procedures

The Armor Center and School has the responsibility to create the environment for automated C3 at brigade and below that will provide horizontal integration for the digitized battlefield. This tasking carries with it the need to consider possible changes to all of the DTLOMS. To achieve this, the MBBL's work focuses on doctrine including TTPs, organization, and training as applicable to the digitized battlefield for the Appliqué-equipped Experimental Force (EXFOR) while the 16th Cavalry Regiment's work focuses on digital TTPs for the rest of the mounted force.

Digitized forces of the future require improved capabilities to achieve the agility, depth, and synchronization that characterize successful Army operations. However, to completely utilize the capabilities of these information systems, commanders at every level must fully understand the digitized battlefield and appropriately employ these improved capabilities during all mission phases to gain and maintain the winning edge. Documents recently published as Special Texts (STs) for digitized brigades, TFs, and company teams (i.e., Department of the Army, 1995e, 1995d, 1995f) assist in this understanding. The primary intent of these documents is to put a conceptual mark on the wall and to serve as conduits for the transition, implementation, and evolution of new doctrine and TTPs. A way to further this intent is through the development of a structured training program that incorporates these concepts for digitized battlefield application. However, understanding the impacts of digitization is critical to the completion of TTPs and training programs for Force XXI. The following section explores these impacts more closely.

Impacts of the Digitized Battlefield

The availability of near real-time information is driving changes in combat tasks, conditions, and standards. At the same time, the once linear phases of battle (operations, preparation, execution, and consolidation) are becoming more parallel. Thus, a major goal of battlefield digitization is a horizontally and vertically integrated digital information network that creates a simultaneous, appropriate picture of the battlespace at each echelon, from soldier to commander (U.S. ADO, 1995).

As well as impacting tactical and doctrinal aspects of the battlefield, information technologies affect the users of such systems. Issues emerging from AWEs and research on automated C3 systems indicate that increased information management requirements and the lack of system integration may limit the benefits of these systems. Further, because such systems are not yet integrated within a common operating environment and technical architecture, each requires individual attention and the cross-integration of information. In 1994, the MBBL and other Department of the Army agencies conducted an AWE known as Desert Hammer VI at the National Training Center (NTC) during Rotation 94-07. A precursor to the Joint Venture

initiative, the central hypothesis of the AWE was that a unit using Force XXI automated C3 devices would outperform a unit without such devices. The final report for this effort (Department of the Army, 1994) highlights comparisons between the digitally equipped rotation and baseline rotations, and describes impacts on DTLOMS and future AWEs. The report concludes that current digital systems provide limited improvement, at best, in lethality, survivability, and tempo. The report also recommends further materiel development and new doctrinal and training development work to maximize the potential of new digital systems. Especially relevant to the current effort are the following conclusions from the final report that point to new training requirements for the digitized BN/TF:

1. Digitization leads to numerous changes in TTPs that the unit's standing operating procedures (SOPs) must address.

2. Leaders require digital proficiency, confidence in the digital systems, and the ability to process vast amounts of information.

3. Training approaches for a digitized BN/TF require review. First, training must produce proficiency on combat fundamentals. Second, training must stress proficiency with the digital systems. Third, training must culminate in warfighting using the actual systems. Figure 2 reflects the key aspects of these conclusions.

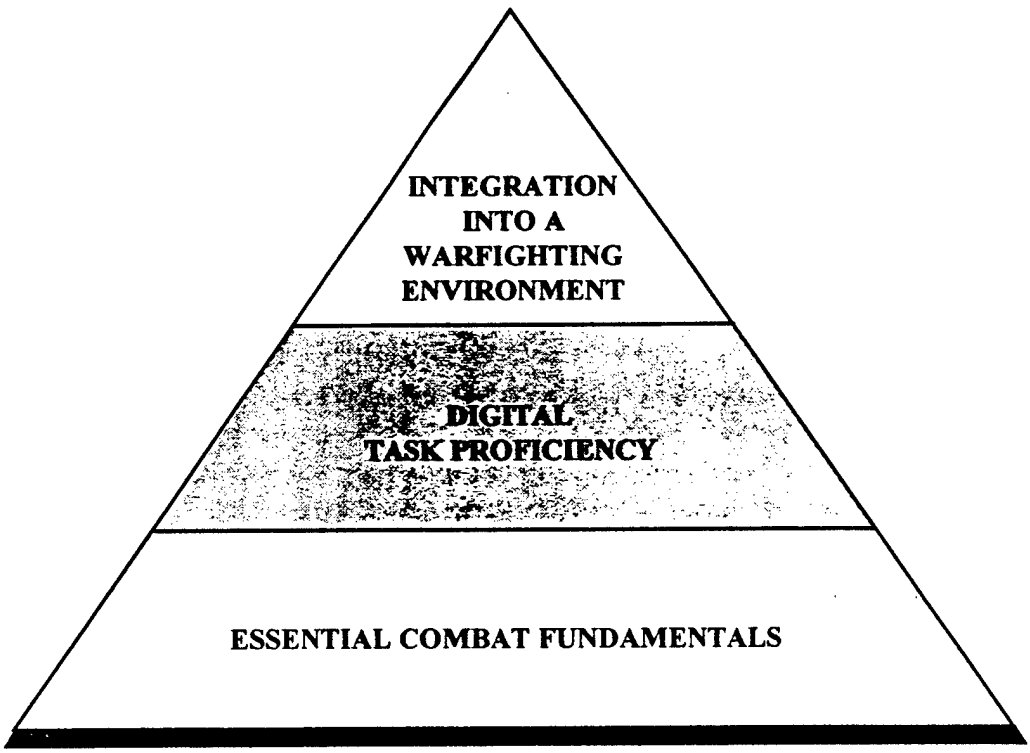

Figure 2. Key aspects of training approaches requiring further review (adapted from Department of the Army, 1994).

Other previous investigations provide similar direction regarding the training requirements associated with battlefield digitization. For instance, data from the Combat Vehicle Command and Control (CVCC) program indicate that vast amounts of information require management skills that allow the soldier and commander to discern that which is important, prioritize it, and integrate it with voice and written information (e.g., Ainslie, Leibrecht, and Atwood, 1991; Atwood, Winsch, Sawyer, Ford, and Quinkert, 1994). Also of critical importance are the ways and the extent to which soldiers train to operate digital equipment. The lessons learned from the CVCC program's final training report (Atwood et al., 1994) relate to training on the digitized battlefield (see Table 1) and provide a context for understanding the training challenges faced by Force XXI. The following section presents an overview of a methodology designed as a response to many of these training challenges.

Table 1

Selected Training Lessons Learned from the Combat Vehicle Command and Control Program (Atwood et al., 1994) Relevant to Force XXI

OVERALL

- Use the crawl-walk-run approach to training design.
- Present demonstrations instead of lectures where appropriate.
- Include hands-on refresher training.
- Explain any necessary artificialities early in the program.
- Increase integrated equipment training.
- Train information systems management.
- Establish a standard for digital device proficiency.

TACTICAL TRAINING EXERCISES

- Keep pace and demands low in initial training stage.
- Use multi-media training aids in the pre-brief to help participants assess the battlefield situation.
- Establish digital versus voice reporting standing operating procedures.

PARTICIPANT FEEDBACK

- Structure opportunities for frequent feedback.
- Involve training staff in the debriefs.
- Provide timely feedback to participants.

Response to Training Challenges

Army modernization, emerging TTPs, and technological advances present significant challenges to the training community in responding to Force XXI initiatives. Key to the successful application of technology is high quality soldiers (Naylor, 1994). Well-trained leaders

and units are necessary in order to leverage technology in meeting the Force XXI objectives of projecting and sustaining the force, protecting the force, winning the information war, conducting precision strikes, and dominating maneuver (Hartzog, 1995).

Rapid paced technological developments and the concomitant digitization of the battlefield places a premium on effective and efficient training methodologies. One way that the training community is facing the challenge to develop high quality soldiers, leaders, and units is through the development of a methodology that enables units to practice, rehearse, and train more frequently, more cost effectively, and to higher standards. This methodology derives from the Reserve Component Virtual Training Program (RCVTP) that involves combinations of virtual and constructive simulation-based TSPs to address critical tasks. These TSPs provide structured situational training scenarios and associated materials that facilitate the conduct and assessment of training.

Structured training refers to training which provides prewritten orders and maneuvers on terrain with predrawn graphics to the training unit. Also, the opposing forces (OPFOR) are set and have instructions which allow the unit to respond in a manner that is observable by observer/controllers (O/Cs). The application of structured training in the development of a RCVTP was recently undertaken at Fort Knox by the Army Research Institute's (ARI) Armored Forces Research Unit. The development effort entitled "Simulation-Based Multiechelon Training Program for Armor Units (SIMUTA)" used simulation capabilities to provide armored units with an intensive Combat Training Center-like training experience. The training simulations used for SIMUTA were Simulation Networking (SIMNET) for platoon through BN/TF training and Janus for BN/TF staff training exercises. (SIMNET and Janus are virtual and constructive simulation training environments described in greater detail later in this chapter.) The SIMUTA TSPs provide an efficient turn-key training system that includes all of the tools needed by O/Cs, the training unit, and site personnel to conduct collective, execution-focused training for conventional battalion and below units. Currently, the Combined Arms Operations at Brigade Level Realistically Achieved through Simulation (COBRAS) effort extends the SIMUTA structured training methodology to the planning and preparation phases of battle at the brigade level for the active component (for a description, see The COBRAS Team, 1995).

The training development efforts of the SIMUTA program (Hoffman, Graves, Koger, Flynn, and Sever, 1995) and the TTP work of the 16th Cavalry and the MBBL provided SIMUTA-D with the opportunity to implement and evaluate innovative structured training techniques for active forces operating on the digitized battlefield. The SIMUTA-D effort combined training development and research activities to investigate the adequacy of digitized structured training materials developed for BN/TF operations on the 21st Century battlefield. A more detailed description of the SIMUTA-D program follows.

The SIMUTA-D Program

The development of a formal TSP for the digitized battlefield was initially conceptualized during the planning stages of the Focused Dispatch AWE. Thus, one of the Focused Dispatch

deliverables was TSPs for digital units (e.g., SIMUTA-D) that would also assist in the preparation of TF 2-33 Armor, the Focused Dispatch experimental unit. Originally, SIMUTA-D was to provide Movement to Contact (MTC) and Defense in Sector (DIS) TSPs for application in Janus-Army (A), SIMNET, and the Western Kentucky Training Area in preparation for the live/virtual Focused Dispatch AWE. The Western Kentucky Training Area was the selected terrain data base. Factors, beyond the control of those involved, intervened and the SIMUTA-D program was not initiated in time to support Focused Dispatch. As a result, it was determined that the best alternative approach was for SIMUTA-D to provide an additional mission (Deliberate Attack [DATK]), drop the requirement to use the Western Kentucky Training Area terrain data base, and limit TSP development to SIMNET and Janus applications using the NTC terrain data base. The SIMUTA-D research plan (BDM, 1995b) reflects this change from the ARI Statement of Work (SOW) (ARI, 1995).

Following Focused Dispatch, the unavailability of the Simulation, Training, and Instrumentation Command (STRICOM)-controlled Mounted Warfare Test Bed at Fort Knox prevented full implementation of the SIMUTA-D SIMNET TSPs. Thus, the SIMUTA-D effort resulted in two sets of TSPs (Janus and SIMNET) developed for MTC, DATK, and DIS missions that were limited to a complete implementation and formative evaluation cycle in Janus. Despite these hurdles, SIMUTA-D successfully used a research and development approach to TSP development that serves as a prototype training program for the digitized battlefield. The following section presents an overview of Janus and SIMNET followed by a brief description of each of the digital devices used during SIMUTA-D.

Configuration

The configuration of SIMUTA-D (unit type, echelon, digital equipment, etc.) followed the approach used during Focused Dispatch and the suggested techniques contained in ST 71-2-2 (Department of the Army, 1995d). Thus, as shown in Figure 3, the SIMUTA-D MTC, DATK, and DIS TSPs support BN/TF mission execution in constructive and virtual simulation environments (Janus-A and SIMNET, respectively) using the NTC database. A description of key Janus and SIMNET capabilities follows.

Janus is a warfighting simulation for battalion staff training based on algorithmic and mathematical computations. The current version of Janus is multi-sided and includes direct fire fratricide. Players interact with Janus by means of a workstation, input tablet, and a plan view display. Janus is a force-on-force simulation that replicates many of the conditions that impact ground combat operations. According to the Department of Defense (1995), these factors include:

1. Weather and terrain

2. Different sight sensor capabilities

3. The characteristics of various direct fire weapons

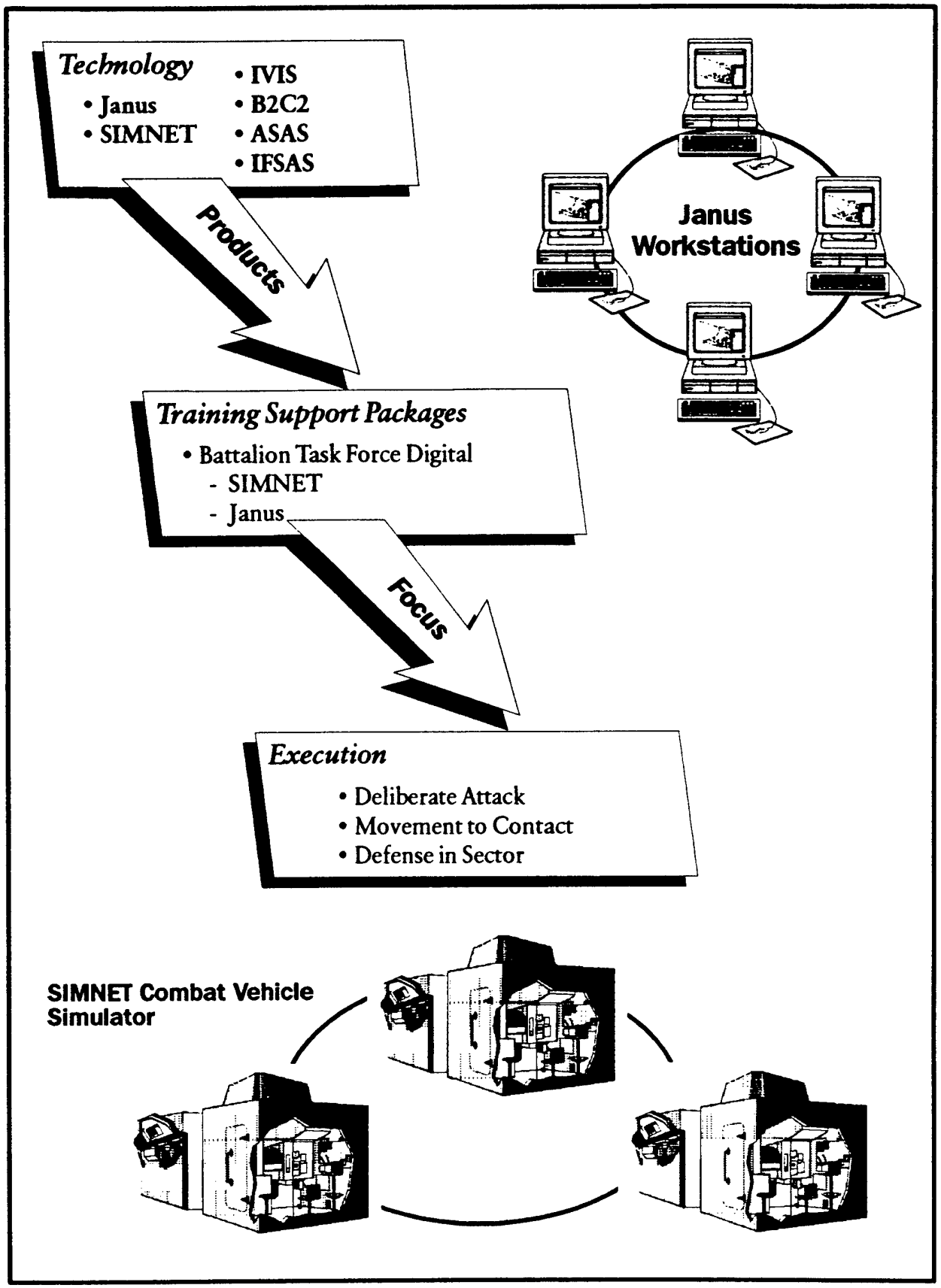

Figure 3. The SIMUTA-D technologies, products, and mission focus.

4. The characteristics of various indirect fire weapons

5. Chemical weapons

6. Mobility/counter mobility/survivability engineer operations

7. Army aviation and close air support aircraft

8. Limited CSS operations

The SIMNET is a virtual simulation for unit training which consists of manned combat vehicle simulators interacting with a synthetic environment and other simulators. Sponsored by the Defense Advanced Research Projects Agency (DARPA) in partnership with the U.S. Army, SIMNET provides a large-scale network of interactive combat simulators. This simulated battlefield allows units to fight force-on-force engagements against an appropriately scaled and realistic opposing force (Saffi, 1991). For more information on SIMNET, see Alluisi (1991) and U. S. Army Armor School (1989).

A description of each the digital devices included in the SIMUTA-D effort appears below:

1. IVIS - an automated C3 system that enables the exchange of preformatted digital combat reports and graphic overlays between battalion command posts (CPs) and individual combat vehicles. IVIS provides position updates, leading to shared situational awareness of friendly forces.

2. B2C2 - an automated system that enables the exchange of free-text messages and logistics information amongst higher and adjacent units, CPs, and commanders' combat vehicles. B2C2 was used primarily for C2 and CSS functions.

3. All Source Analysis System (ASAS) - an automated intelligence system that provides for the exchange of (processed) intelligence information between brigade and the TF Main CP.

4. Improved Fire Support Automated System (IFSAS) - an automated FS system that provides a digital message capability.

Training issues related to the use of the digital devices employed during SIMUTA-D are important. However, documentation is lacking on training issues specific to each of the digital systems listed above. Fortunately, the research conducted under the CVCC program that focused on training issues for digital systems (e.g., Ainslie, et al., 1991; Atwood, et al., 1994) provides information which can be generalized to the SIMUTA-D effort. Examples of such training issues that can be drawn from the CVCC effort address how to best: (a) determine the appropriate approach to training design, (b) minimize classroom training, (c) explain/minimize device artificialities and reliability problems, (d) provide effective integrated equipment training,

(e) train information management skills, (f) establish digital SOPs that make tactical sense and provide adequate training opportunities, and (g) use a structured approach to provide frequent and timely feedback. A discussion of how many of these issues relate to the SIMUTA-D effort appears throughout this report.

Major Objectives

The SIMUTA-D program capitalized on the MBBL and Armor School initiatives to achieve its goal of developing methods for converting structured training for a conventional BN/TF to structured training for a digitally-equipped BN/TF. (A review of the structured training concept appears in the following section.) The development effort resulted in TSPs that address use of the IVIS, the B2C2, the ASAS, and the IFSAS during BN/TF operations. The objectives for reaching that goal as stated in the research plan (BDM, 1995b) were as follows:

1. Design and document a prototype training program for automated C3 on the digitized battlefield that incorporates collective training at the battalion level to ensure effective horizontal task integration. Develop the SIMUTA-D training program for both SIMNET and Janus application following TSP models established in the SIMUTA program.

2. Convert the Simulation-Based Multiechelon Training Program for Armor Units-Battalion Exercise Expansion (SIMUTA-B) DATK, MTC, and DIS mission TSPs for SIMNET and Janus applications.

3. Conduct a formative evaluation (FE) of the training program during its initial implementation, in accordance with approved evaluation criteria based on training standards.

4. Document program methodology, results, and lessons learned in a research report written with parameters established in the ARI Publication Guidelines.

Structured Training

Overview

For the SIMUTA programs, structured training leverages simulation technology and offers improvements by compressing and distributing training, modernizing training support, and focusing on critical tasks. Structured training involves a deliberate, purposeful approach to training development and takes advantage of simulation capabilities to provide the stimulus events that lead to the exercise and practice of critical tasks and combat skills. The simulation exercises provide the stimulus events for critical subtasks in a planned sequence that reinforces learning and builds on prior experience. Training occurs in the context of tactically realistic scenarios, immersing the unit in the tactical situation, thereby maximizing the training value.

With careful attention to standardization and doctrine, two primary characteristics distinguish structured training: (a) a focus on specific training objectives in a deliberately-

constructed training strategy, deriving from critical task summaries associated with the tactical situation; and (b) the application of instructional design principles coupled with simulation capabilities to provide training that is both efficient and effective. The following guidelines from Campbell, Campbell, Sanders, Flynn, and Myers (1995), substantiate these characteristics:

1. Training exercises support the selected mission, enemy, terrain, troops, and time available (METT-T).

2. The training fits within the unit's time and personnel constraints.

3. The exercises use documented task sources for the selected unit and mission types, such as Army Training and Evaluation Program-Mission Training Plans (ARTEP-MTPs) and Field Manuals (FMs).

4. The exercises take advantage of and work within the capabilities of the selected simulations.

5. The exercises support an appropriate training sequence (e.g., crawl, walk, run, natural order, etc.) with regard to task difficulty.

6. Critical tasks are performed more than once in order to reinforce learning.

7. The exercise materials (i.e., TSPs) result in a turn-key training program that allows the unit to focus on the training benefit rather than on design, development, and administration of the training exercise.

8. The training program utilizes trained O/Cs, who control the exercise and simulation equipment and provide feedback and coaching throughout and after the training exercise in an after action review (AAR).

For SIMUTA-D, a ninth guideline was that training exercises take advantage of and work within the capabilities of the selected digital devices and consider equipment constraints.

Development Methodology

Campbell et al. (1995) provide a comprehensive methodology for developing structured simulation-based training that describes the foundation of the SIMUTA-D TSPs. Combining aspects of the systems approach to training with the previously referenced guidelines, the development methodology comprises four phases, each with a distinct outcome. These phases and their outcomes appear in Table 2. The following paragraphs provide a discussion.

Phase 1 results in initial decisions that essentially scope the development activity. Based on the sponsoring agency's requirements, a target unit (or unit type) is selected. Through dialogue, the development team and the sponsoring agency reach consensus on the initial decisions (as outlined in Table 2). These decisions govern the outcomes of the remaining phases.

Table 2

Development Phases for Simulation-Based Training Exercises and their Outcomes

PHASE	OUTCOME
Make Initial Decisions.	Selected echelon and unit type Mission and enemy type Terrain Difficulty level Time constraints
Select Training Objectives.	Critical tasks and performance standards, appropriate to the echelon, mission, and simulation environment
Design Scenario and Exercise Outline.	Draft mission Tactical framework Scenario event outline Mapping of training objectives to exercise events Allocation of resources
Develop Training Support Packages.	Training support package construction, trials, and evaluation

Training objectives determined in Phase 2 are appropriate for the target unit, mission, enemy, terrain, etc. The appropriate tasks, task sources, and task standards are refined for the relevant simulation to ensure that SIMNET or Janus can support task performance and observation requirements.

Phase 3 represents the development of the unit and higher echelon missions, leading to the scenario event outline. Activities include drafting the concept of operations, graphics overlays, and operations orders (OPORDs) for the target unit and two echelons above. The event outline crosswalks the scenario events that serve as cues, expected performance, and the critical tasks/subtasks which they support, to ensure that the context and specifications trigger the designated critical subtasks. Table 3 shows an event outline crosswalk for SIMUTA-D.

Phase 4 represents both a production and an evaluation phase. As the TSPs are constructed, they are trialed at various stages of completion with the results guiding improvements. For example, the development team exercises the simulation, ensuring that the scenario events occur as scripted and that there is ample opportunity for the unit's expected response. Trials continue in an iterative, increasingly complex fashion, culminating in a FE of the entire training package conducted with the target unit.

Table 3

Event Outline Crosswalk

EVENT NUMBER OR DESCRIPTION	STIMULUS OR CUE	UNIT RESPONSE	TASKS/CRITICAL SUBTASKS
1. LD phase line HANCOCK	Unit crosses LD.	Reports LD to higher headquarters.	3901 Supervise TOC operations/collection of information. 3904 Issue FRAGOs, as necessary, implementing changes to original tactical plan. 3912 Coordinate and supervise TF CSS activities. 3904 Sends required/critical reports to brigade as necessary **using B2C2.**
2. Regimental Reconnaissance	Unit makes contact with OPFOR regimental recon moved by observer/ controller/ interactor.	Report and maneuver.	3904 Monitor scout development of situation. 3901 Supervise TOC operations/collection of information. 3904 Issue FRAGOs, as necessary, implementing changes to original tactical plan. 3912 Coordinate and supervise TF CSS activities. 3904 Sends required/critical reports to brigade as necessary **using B2C2.**

All SIMUTA TSPs comprise several volumes that include preparation materials for the unit, execution materials for O/Cs, and training performance feedback and summary report materials. Table 4 provides a comparison of TSPs as defined by TRADOC Regulation 350-70 (U. S. Army TRADOC, 1996) and the SIMUTA-D TSPs. Table 4 reflects the terminology used in TRADOC Regulation 350-70. While the terminology used to describe the materials contained

Table 4

Comparison of TRADOC Regulation 350-70 (U.S. Army TRADOC, 1996) and SIMUTA-D Training Support Packages

TRADOC 350-70 TRAINING SUPPORT PACKAGE CONTENTS		SIMUTA-D VOLUME(S)
Unit Preparation	Training Sequence	1 & 2
	Training Objectives	1 & 2
	Training and Evaluation Outline	1 & 2
	Measures of Performance	1, 2, 3, 4, & 5
	Target Audience	1 & 2
	Equipment Package	1 & 2
Trainer	Observer/Controller Support Package	3, 4, & 5
	Tables/Exercises/Drills	3, 4, & 5
	"A WAY" (Demonstration)	NOT INCLUDED
	Take Home Package Guide	3, 4, & 5
	After Action Review Framework	3, 4, & 5
	Opposing Force Support Package	3, 4, & 5
	Train-the-Trainer Guide	1
	Exercise Directive Support Package	3, 4, & 5
	Rules of Engagement	3, 4, & 5
	Manual Workaround Standing Operating Procedures	3, 4, & 5
Tactical	Scenarios	1, 2, 3, 4, & 5
	Execution Matrix	3, 4, & 5
	Operations Order	3, 4, & 5
	Overlays/Maps	3, 4, & 5
	Intelligence Summaries	3, 4, & 5
Simulation Environment	Environment Conditions	1 & 2
	Duration	1 & 2
	Unit Start Exercise Status	1, 2, 3, 4, & 5
	Training Aids, Devices, Simulators, and Simulation	1 & 2
	System/Entity Tapes	3, 4, & 5
	Classes of Supply, Land Ranges, etc.	3, 4, & 5
Administrative Data	Cost Models	
	Tactical Forces	3, 4, & 5
	Direct Support	1
	Personnel Support	1
	Communications	1
	Table of Organization and Equipment	3, 4, & 5

in the SIMUTA-D TSPs sometimes differs from TRADOC Regulation 350-70, the content requirements are, in large part, satisfied.

Organization of the Report

This report contains four major chapters. The Introduction outlined the factors bearing on current training requirements for the Army of the future and the Army's response to these factors. This chapter includes a description of a development methodology for structured training exercises which the training community is using to meet the challenges of the future battlefield. The Method chapter discusses the application of this methodology to TSPs constructed for the digitized battlefield and the conduct of the FE. The Results and Discussion chapter presents the FE findings. It concludes with lessons learned, along with some insights into further program extensions. The final chapter, Conclusions, recaps the most salient findings and lessons learned.

Digital Development Method

This chapter describes the TSP development and assessment methods used to achieve the project's stated objectives. It provides the blueprint for structuring and guiding the technical work called for in the SOW (ARI, 1995). The technical approach relied on the availability of target unit personnel fully qualified on the digital equipment (e.g., IVIS, B2C2) and combat fundamentals. The guidance contained in the SOW for this effort specified the development of digitally focused TSPs for the following conditions: two simulation domains--SIMNET and Janus-A; three mission types--MTC, DIS, and DATK for armor BN/TF level staff exercises; and incorporation of digital equipment (IVIS, ASAS, B2C2, and IFSAS[2]). The general approach to fulfilling the objectives consisted of two phases: (a) TSP design and development, and (b) TSP piloting and FE. This chapter describes the methods employed for both of these phases separately, beginning with the design and development of the TSPs.

Training Support Package Design and Development

A series of steps comprised the design of the training program. They included establishing training requirements for the digitized battlefield through reviewing the Department of the Army's STs (1995d, 1995e, and 1995f), with emphasis on ST 71-2-2; interviewing key subject matter experts (SMEs); inspecting the SIMUTA-B task lists for correspondence with SME input; and crosswalking the SIMUTA-B task list with the ARTEP 71-2-MTP and the Fort Knox Supplemental Manual (FKSM) 71-2 MTP for the M1A2 (Department of the Army, 1988, 1995c). Table 5 depicts an exemplar task as specified in the FKSM 71-2 MTP and shows the way that it was operationalized on observation forms developed for SIMUTA-D. (The observation forms are described later in this chapter.)

---

[2] Forward Entry Devices (FEDs) were used to send artillery information to IFSAS.

Table 5

Exemplar Task Crosswalk between the FKSM 71-2 MTP (Department of the Army, 1995c) and the SIMUTA-D Observation Forms

Task 7-1-3904 OPERATE MAIN COMMAND POST	
FKSM 71-2 MTP Subtasks	SIMUTA-D Observation Form
.1 Main CP moves and positions. .2 Main CP issues warning orders. .3 TF commander or Main CP OIC analyzes mission. .4 Main CP OIC collects or updates estimates. .5 TF commander or Main CP OIC issues initial planning guidance. .6 Main CP OIC issues FRAGOs implementing movement, reconnaissance, and other preparations. .7 Main CP OIC coordinates collection of additional information. .8 TF commander and staff develop and war game courses of action and select one. .9 Main CP OIC and staff develop the OPORD from the commander's guidance. .10 TF commander or Main CP OIC reviews, modifies, and approves the OPORD. .11 TF issues the OPORD/FRAGO/warning order. .12 TF XO and staff refine plans, coordinate and supervise preparation activities, and disseminate new information. .13 SO prepares a communication plan. .14 Main CP supports the command group in command, control, and coordination of the battle. .15 Main CP reports.	XO • Issue FRAGOS, as necessary, implementing changes to original tactical plan. • Send required/critical reports to Bde as necessary **using B2C2.** • Monitor scout development of situation. • Monitor development of situation. • Monitor/resume scout forward screen to provide early warning of enemy follow on elements. • Issue FRAGOs, as necessary, **using IVIS** implementing changes to original tactical plan. S2 • Serve as TF O&I net NCS. • Update Bde S2 **using ASAS.** S3 • Serve as TF Cmd net NCS.

Combined, this front-end analysis (FEA) effort supported all of the design/development activities necessary for developing each mission's TSP. Much of the design/development methodology used for SIMUTA-D appears in the original SIMUTA documents. Therefore, the reader interested in obtaining procedural details not contained in this report is referred to Campbell

et al., (1995) and Hoffman et al., (1995). Table 6 shows all of the major steps involved in the SIMUTA-D TSP design/development process. The following paragraphs describe the TSP design/development process in greater detail.

Table 6

The Training Support Package Design/Development Process

CONDUCT FRONT-END ANALYSIS
- Review key literature.
- Conduct interviews with digital SME personnel.

CONVERT CONVENTIONAL TSPS FOR DIGITAL APPLICATION
- Determine critical task list for each mission.
- Develop digital device familiarity.
- Identify digital device training limitations.
- Filter task lists by simulation type.
- Develop/revise mission exercises.
- Develop/revise additional TSP materials.

REVISE ALL MATERIALS IN AN ITERATIVE FASHION

Conduct Front-End Analysis

Before conversion of the existing SIMUTA TF TSPs began, key documentation from the SIMUTA program including Campbell et al. (1995); Hoffman et al. (1995); and Turecek, Campbell, Myers, and Garth (1995) was reviewed. The review also included relevant TTP documents (i.e., Department of the Army, 1995c, 1995d, 1995e, and 1995f). The conversion process spanned all phases of the SIMUTA-D program, including design, development, piloting, training program revisions, and the FE.

The next step in identifying the training requirements for SIMUTA-D was conducting structured interviews with digital SMEs. The interview audience included: (a) A SME representing the Armor School; (b) SMEs on TTPs for digital application from the 4/16 Cavalry; (c) O/Cs from the 5/16th Cavalry; and (d) key staff personnel from TF 2-33 Armor. Except for the Armor School SME, all SMEs interviewed had either directly observed or participated in the Virtual Simulation I (VS I) and the Janus III trials of the Focused Dispatch experiment (described in Department of the Army, 1995a). At least 48 hours prior to each interview, a designated point of contact (POC) received a preview copy of all questions for distribution to each interview participant. In at least one case, the participants discussed the questions as a group prior to the actual interview. The ARI Fort Knox Field Unit handled general coordination for access to digital SMEs. Early access to individuals planning to leave Fort Knox for new assignments drove the interview schedule.

All interview participants were briefed on the major objectives of the SIMUTA-D program and were informed that the primary objective of the interviews was to capitalize on training lessons learned from the VS I and Janus III trials of Focused Dispatch. Participants were asked to draw upon their observations during Focused Dispatch, with particular emphasis on training issues as they related to the use of digital devices and ST 71-2-2 (Department of the Army, 1995d). The general categories of questions were similar for each interview group with specific questions written to capitalize on a particular group's expertise. For instance, questions written for the O/C participants focused on training and data collection issues; questions written for the 4/16 Cavalry focused on issues surrounding TTP doctrine; questions written for TF 2-33 Armor focused on the use of the digital devices, information management, and TTPs for the digitized battlefield; and questions directed at the Armor School SME focused on the identification of special training requirements associated with a digitized battalion. In general, most participants were asked to comment on lessons learned regarding training requirements associated with the digital devices, to compare differences in training requirements between Janus and SIMNET, to comment on information management issues, to discuss the components of an AAR needed to support digital applications, and to give examples of effective and ineffective training associated with the use of the digital devices. The SIMUTA-D interview team consisted of representatives from the FE and Design/Development teams. A representative from the ARI Fort Knox Field Unit typically attended each of the interviews.

Convert Conventional TSPs for Digital Application

Once specific response categories from the FEA interviews were flagged for action, formal development of the TSPs began. Determining the order of TSP development was driven by several factors including access to the SIMNET and Janus facilities, the availability of TF 2-33 Armor and the O/Cs, and strategies for capitalizing on the ongoing training development being conducted under SIMUTA-B and the Simulation-Based Mounted Brigade Training Program (SIMBART). (See BDM Federal, 1995a for a description of the SIMBART program.) While the research plan (BDM, 1995b) called for SIMUTA-D to convert completed SIMUTA-B TSPs, the development time frame for SIMUTA-B actually led to frequent simultaneous development efforts (see the Results and Discussion chapter for further detail). Further, the development of SIMNET and Janus-A TSPs frequently occurred in a parallel fashion to take full advantage of available resources. It is important to note that while the SIMUTA-B TSPs served as the baseline for SIMUTA-D TSP development, the information gathered from the SIMUTA-D FEA supported the entire development process.

The first step in developing the TSPs was determining a critical SIMUTA-D task list for each mission. This was accomplished by comparing the tasks specified in FKSM MTP 71-2 for the M1A2 (Department of the Army, 1995c) and the M1A2 task list provided by the Armor School (R. B. Armstrong, personal communication, August 7, 1995) to the SIMUTA-B task lists (and embedded critical subtasks). The SIMUTA-D team determined that all tasks on the SIMUTA-B task lists were required and prepared to insert doctrinally-based tasks where appropriate. However, a review of these documents found no new collective tasks or subtasks for BN/TF staffs operating in a digital environment. This finding was echoed by the interview participants who commonly

reported that digitization of the battlefield did not create new tasks for battalion staffs during Focused Dispatch, rather it changed the way in which some tasks were accomplished.

Following construction of each SIMUTA-D task list, training limitations linked to the digital devices were identified. These limitations focused on technological feasibility (i.e., does the current version of the device software allow support?) and device applicability (i.e., does the device logically support the task in the simulation environment?). As identifying limitations required some degree of device familiarity and technical expertise, the SIMUTA-D team coordinated findings (particularly technology constraints) with the appropriate device development agency/SME. To further facilitate completion of this task, a SIMUTA-D Technology subteam assisted the SIMUTA-D team in developing device familiarity, sometimes consulting with device and networking SMEs from TF 2-33 Armor. Access to digital devices was a constraining factor in developing a comprehensive task list (a discussion of these constraints appears in the Results and Discussion chapter of this report.) Relying on the Burnside methodology (1990), the task list for each mission was filtered by simulation type (SIMNET and Janus-A) to ensure that the respective task lists were executable. Burnside (1990) rated tasks for SIMNET in terms of whether the simulation: (a) highly supported, (b) partially supported, (c) minimally supported, (d) required outside support, or (e) did not support task execution. For example, Burnside (1990) rated ARTEP Task 7-1-3007, Assault, as highly supported due to the maneuverability and enemy observation capabilities available in SIMNET. Thus, the Burnside ratings were used by the SIMUTA-D SMEs to check the suitability of tasks selected for SIMNET. Further, the SIMUTA-D team did an informal assessment of tasks for Janus using Burnside's (1990) suggested criteria for SIMNET. Using this methodology, no tasks were filtered out of the task list for either simulation. This was expected given that the SIMUTA-D task list was based on the SIMUTA-B task list which had undergone a similar filtering process.

Using established procedures (i.e., SIMUTA), the SIMUTA-D team developed/revised the SIMUTA-B exercises to account for new requirements. Generally, this conversion process used the training objectives of the original SIMUTA exercises, but accounted for upgrades within the simulations (Janus-A and SIMNET) and the advantages/limitations of the digital devices.

Next, the task list was used to develop an observation form for each mission (see Figure 4). Each observation form supported a specific position (e.g., S2) with critical tasks grouped by mission segment. Critical tasks reflected use of the digital devices as appropriate. Digitized tasks were highlighted to indicate that they had been modified by the SIMUTA-D team to account for the impact of digital devices on task performance. The O/Cs were informed that the highlighted tasks did not reflect TRADOC approved modifications to ARTEP tasks.

These forms are a data collection tool developed for the O/C team to use during mission execution, with the critical task information (i.e., AAR performance measures) ultimately supporting the conduct of AARs that support digital application and the development of take home packages (THPs). Given the O/C's expected familiarity with conventional and digital TTPs, the forms contain only the appropriate amount of detail needed to guide O/C observations. Thus, the SIMUTA-D team made a conscious effort not to overload the observation forms with a level of

SEGMENT 1: SECURITY FORCE BATTLE

ARTEP TASK #	EVENTS/CRITICAL SUBTASKS/STAFF ACTIONS	O/✓	TIME/COMMENTS
	CRPs		
3905	• Disseminate scout contact report on TF Cmd net **using IVIS**		
3401	• Maintain voice **and ASAS** commo on all required nets		
3905	• Disseminate latest division Intelligence Summary on TF Cmd net		
3904	• Serve as TF O&I net NCS		
3906	• Update SITEMP		
3906	• Update Bde S2 **using ASAS**		

Figure 4. An excerpt from the S2 Observation Form for the Defense in Sector mission.

detail that would inhibit practical use. Modification of the observation forms occurred repeatedly throughout the TSP development cycle.

The SIMUTA-D TSPs also include train-the-trainer information that provides O/C instructions and training management materials for exercise implementation. Train-the-trainer information includes all necessary elements of the trainer control procedures and relies on the lessons learned in the SIMUTA, SIMUTA-B, and SIMBART projects. The SIMUTA teach/coach/mentor approach (which refers to the degree of intervention provided by the O/Cs during the crawl-walk-run stages of training execution) is reflected in these materials and during each training exercise. See Hoffman et al., 1995 for more details on the SIMUTA teach/coach/ mentor approach. The TSP training management materials support operational control of the training process and consist of three types of training management tools:

1. Information, instructions, and procedures required in advance of arriving at the Janus-A or SIMNET site.

2. Information, instructions, and procedures required at the Janus-A or SIMNET site.

3. Information, instructions, and procedures for using AAR and THP materials.

These materials serve the function of ensuring turn-key training as previously established in the original SIMUTA project (see Hoffman et al., 1995).

Formatting of the TSPs follows the SIMUTA-B model which uses a structured writing method that has the following characteristics (U. S. Army TRADOC Regulation 25-34, 1993):

1. Information appears in small units by purpose or function.

2. Use and need drive information sequencing.

3. Topic identification clearly supports scanning.

4. Information appears in modular units that support isolation and quick changes.

Training Support Package Pilot and Formative Evaluation Trials

Approach

The methods employed in this project for piloting and formatively evaluating the TSPs provided the principal means for capturing operationally oriented user feedback. Successful piloting and a comprehensive FE required the following tasks: (a) planning and coordination of the resources required to support the activities associated with piloting and formatively evaluating the TSPs; (b) monitoring of unit execution of training exercises, with collection of data; and (c) refinement of TSPs. The SIMUTA-D team performed detailed planning in close coordination with the Contracting Officer's Representative (COR), the MBBL, 5/16 Cavalry (i.e., the O/Cs), and TF 2-33 Armor. The general approach began with thoroughly piloting the TSPs and then conducting FE activities in conjunction with initial implementation of the training scenarios with an actual unit (i.e., TF 2-33 Armor).

Table 7 shows the model for conducting TSP trials. Planning targeted every identifiable opportunity to operationally evaluate each TSP. Concurrence of government personnel, especially target unit leaders and O/Cs, minimized any disruptive impact on the unit's training activities. The primary objective of the FE was an assessment of all TSPs in terms of training materials and exercise adequacy, including SME judgments of training quality. A critical aim of the entire process was identification of the modifications and improvements needed to enhance the effectiveness of each TSP. Following the SIMUTA methodology, this information was gathered via responses to questionnaires, interview comments, and observations. Hence, all of the SIMUTA-D data are subjective in nature. Overall, the FE focused on the participants' perception of how well each TSP module prepared them to operate in a digital environment. Training benefit, preparation, and exercise design are examples of categories used to organize the collected data. Procedures and instruments (e.g., observation forms, interview outlines) were developed to capture the data. Commonly accepted monitoring/observation methods and procedures (e.g., Barber, 1976; Borders and Abbott, 1988) were employed, tailored as necessary to accommodate differences across exercises or to benefit from lessons learned.

Table 7

Model for Conducting Training Support Package Trials

TRIAL	DESCRIPTION
Level 1	Initial set-up and initialization of scenario by SIMUTA-D team and site personnel with little or no observer/controller involvement. Includes defining forces, assigning workstations, building overlays, initial deployment of forces with routes, etc. Characterized as a basic validation of the tactical scenario.
Level 2	Initial pilots with some observer/controller team members with the goal of validating all of the technical aspects of the scenario, including execution. The focus is on tactical implementation, not evaluation.
Level 3	Pilot with goal of examining the entire training support package. Requires the observer/controller team and additional resources to role play the training unit.
Level 4	Full up trial with the training unit. Goal is to conduct a formative evaluation of the entire training support package.

The SIMUTA-D team monitored the execution of all training exercises. Team members worked alongside the O/Cs and unit personnel on a non-intrusive basis, observing mission preparation and execution as well as AARs. To prepare for the training exercises, the SIMUTA-D team provided the O/Cs with training procedure implementation instructions via the TSP train-the-trainer materials. The O/Cs did not receive any formal training on the use of the TSPs. During execution of the training exercises, the SIMUTA-D team was available to assist unit leaders and O/Cs in the application of training materials. (As stated earlier, the O/Cs and TF 2-33 Armor were expected to be proficient on combat fundamentals.)

Immediately following completion of each battalion AAR, the SIMUTA-D team met with unit leaders and O/Cs to review and discuss their observations. This facilitated the accurate capture of lessons learned and program refinements needed, and provided a forum for resolving any issues not addressed during implementation of the exercise. Critical issues related to data collection were identified throughout the data collection period. Quality control procedures for all data collection methods were implemented on a regular basis. Such procedures consisted of conducting a data collection training session for SIMUTA-D team members before Level 3 trials began, checking with team members to ensure that they were capturing the appropriate data during the actual trials, and reviewing each data collection packet at the end of the day for completeness. Major findings from the FE appear in the Results and Discussion chapter of this report.

The FE data provide recommendations for TSP refinements in accordance with user suggestions and recommendations, SIMUTA-D team member suggestions, resolution of initial implementation problems, lessons learned, etc. Where appropriate, the impact of a particular recommendation was analyzed and the COR was advised accordingly. Approved refinements reflect the COR's guidance, with modifications incorporated at the appropriate places in each TSP.

Procedures

Collecting the data. The primary objective of the FE was to assess how well each TSP supported mission execution in a digital environment. This assessment occurred throughout the design/development and implementation phases of the SIMUTA-D project. However, formal assessment of the TSPs occurred only during the FE trials. Three types of data collection instruments supported formal assessment of the TSPs: (a) training evaluation questionnaires, (b) FE observation forms, and (c) hot wash interview questions. Training evaluation questionnaires were administered to all participants (i.e., O/Cs and TF 2-33 Armor) by the SIMUTA-D team with separate versions developed for O/C and unit participants. Both questionnaires contained rating scales and open-ended questions, and required participants to rate the adequacy of each training module (i.e., each major TSP component) in preparing them to successfully accomplish their tasks. Questionnaires addressed overall training, exercise difficulty, adequacy of TTP training for the digital environment, effectiveness of the AARs, and potential areas of improvement for the training program. An excerpt from the Unit Training Evaluation Questionnaire is shown in Figure 5.

All members of the SIMUTA-D team tasked with data collection responsibilities received training on collecting observational data from the lead FE team member. Training occurred just prior to the first Level 3 trial and consisted of: (a) a briefing on basic observational techniques, (b) a discussion of each exercise's focus, and (c) instructions on how to use the observation forms to structure observations. Figure 6 shows an excerpt from the FE Observation Form used by the SIMUTA-D team. Familiarity with the scenarios, TTPs for the digitized battlefield, performance measures, and the devices was required of each observer. Since such familiarity may have its disadvantages from a data collection standpoint (i.e., possible loss of objectivity), observers were briefed on the importance of remaining unbiased while performing their data collection responsibilities.

The lead SIMUTA-D military SME conducted hot wash discussions with the participants (i.e., TF 2-33 Armor role players and O/Cs) at the end of each battalion AAR. Some questions were prewritten, but in general, questions for the hot washes focused on training issues that the SIMUTA-D team members observed or participants voiced during the course of the training mission. The primary objective of the hot washes was to use a group discussion forum to ascertain O/C and TF 2-33 Armor's assessment of various components of the training. In general, the hot wash topics focused on: (a) the implementation of TTPs for the digitized battlefield; (b) the length and timing of the AARs; (c) the overall training benefit of the program; and (d) factors which may have influenced training performance such as equipment breakdowns and insufficient familiarity with the digital devices.

Training Missions

6. The training events exercised the task conditions and standards:	Strongly Disagree		Neutral		Strongly Agree
Deliberate Attack	1	2	3	4	5
Defense in Sector	1	2	3	4	5
Movement to Contact	1	2	3	4	5

7. The training events exercised digital capabilities:	Strongly Disagree		Neutral		Strongly Agree
Deliberate Attack	1	2	3	4	5
Defense in Sector	1	2	3	4	5
Movement to Contact	1	2	3	4	5

8. After participating in the training, I am better able to apply digital equipment on the battlefield:	Strongly Disagree		Neutral		Strongly Agree
	1	2	3	4	5

9. Were you provided all the training needed to perform your role effectively?	Yes	No
If no, how could we improve the role-specific elements of the training?		

10. What additional training conditions and standards, if any, are necessary for the digitized battlefield? If these vary for different mission-types, please specify.

Figure 5. An excerpt from the Unit Training Evaluation Questionnaire

Battalion AAR

What were the primary topics discussed by the O/C?

The O/C:

1. Focused on critical subtasks	**Yes**	**Some**	**No**
2. Had unit leaders provide analysis	**Yes**	**Some**	**No**
3. Had unit provide sustain and improve input	**Yes**	**Some**	**No**
4. Provided examples of performance	**Yes**	**Some**	**No**
5. Facilitated unit problem-solving discussion	**Yes**	**Some**	**No**
6. Provided positive feedback	**Yes**	**Some**	**No**
7. Referenced use of the digital devices	**Yes**	**Some**	**No**

What are Three Key Areas for Improvement Related to Conduct of the AAR?

1.
2.
3.

Figure 6. An excerpt from the Formative Evaluation Observation Form.

Conducting the trials. Access problems with the unit and O/C personnel, the digital devices, and the simulation facilities led to deviations from the model (shown in Table 7) for conducting pilot (i.e., Level 1, 2, and 3 trials) and Level 4 FE trials of the SIMUTA-D TSPs. Table 8 shows the discrepancies between all planned trial procedures. A description of these discrepancies and the actual training events appears below. See the Results and Discussion chapter for a discussion of the ramifications of the discrepancies.

Table 8

Actual Training Events by Trial Level, Mission, and Simulation

TRAINING EVENTS	TRIAL LEVEL	MISSION	SIMULATION
CONVENTIONAL FOCUS			
Set up and initialize scenarios.	1	All	SIMNET/Janus-A
Validate tactical aspects of scenarios.	2	All	SIMNET/Janus-A
DIGITAL FOCUS			
Validate technical aspects of scenarios.	2	All	SIMNET/Janus-A at TF 2-33 Armor's Digital Learning Center
Introductory Briefing	3, 4	All	Janus-A
O/C Device Refresher Training	3	MTC	Janus-A
O/C Mission Rehearsal	3	MTC	Janus-A
Unit Mission Rehearsal	3, 4	All	Janus-A
Section AAR Preparation	3	MTC, DIS	Janus-A
Section AARs	3	MTC, DIS	Janus-A
Command Post AAR Preparation	3, 4	All	Janus-A
Command Post AARs	3, 4	All	Janus-A
Battalion AAR Preparation	3, 4	All	Janus-A
Battalion AAR	3, 4	All	Janus-A
Training Evaluation Questionnaire	3, 4	All	Janus-A
Mission Hotwash	3, 4	All	Janus-A

Notes. The DATK mission did not undergo Level 3 piloting. The O/Cs role played unit members only during the Level 3 MTC mission.

Level 1 pilot trials occurred concurrent with TSP development for both SIMNET and Janus-A. This level reflects an informal, iterative process where elements of the exercises are tested and revised as they are developed. All SIMUTA-D missions underwent Level 1 piloting.

Level 2 pilot trials represent a greater degree of formality. Because they involve the O/C team, they inherently have more coordination requirements than Level 1 pilot trials. Level 2 pilot trials occurred for each mission and consisted mostly of an O/C review of each mission's OPORD followed by a run through of each mission using semi-automated forces. Comments from the O/Cs were solicited and incorporated into the scenario development process as appropriate. To support Level 2 activities that required use of the digital devices, the SIMUTA-D team used stand-alone IVIS and B2C2s housed at TF 2-33 Armor's Digital Learning Center. In addition, members of the SIMUTA-D team also observed use of these devices during portions of the Focused Dispatch trials.

Tactical implementation of the digital devices was not investigated, nor were key staff member positions role played.

Level 3 pilot trials represent a dry run of the entire TSP. Due to constraints with the SIMNET facility, no Level 3 or Level 4 trials occurred in SIMNET (see the Results and Discussion chapter for greater detail). Thus, all references to Level 3 and Level 4 trials relate to events that occurred in the Janus-A constructive simulation environment.

The primary difference between the planned Level 3 trials and the Level 4 trials was that the O/Cs were to role play the staff members during Level 3 trials while TF 2-33 Armor members were to fill those roles during the Level 4 trials. With the exception of ASAS and IFSAS, all digital devices were to be operated by the O/Cs during the Level 3 trials. TF 2-33 Armor personnel were to provide instruction on digital device operation to the O/Cs as needed. This approach to Level 3 trials had two primary purposes. First, the approach provided the SIMUTA-D team the opportunity to exercise the TSPs and make revisions (based on input from the O/Cs and the SIMUTA-D team) to each of the packages before the unit participated in Level 4 trials. Second, the Level 3 trials served as a training opportunity for the O/C team by allowing them to use the mission execution portions of each TSP first hand in a full-up, digital environment. This approach to Level 3 trials was followed only for the first week. For the final week of Level 3 trials, TF 2-33 Armor and the O/Cs assumed their normal roles (i.e., TF 2-33 Armor filled the roles of the training unit while the O/Cs served as the trainers and program implementors). A discussion of the factors leading to this change appears later in this section. All missions, except DATK, underwent Level 3 piloting in Janus-A. The conduct of each Level 3 pilot trial is described below.

Unless otherwise noted, the procedures discussed for Level 3 and Level 4 trials were identical. The beginning of each trial week usually began with at least one full day of equipment set-up and functional testing. Efforts were made to configure the training site so that it would replicate the Focused Dispatch operational, technical, and system architectures and the descriptions given in ST 71-2-2 (Department of the Army, 1995d) as closely as technological constraints would allow. Figure 7 shows the Janus-A workstation staffing structure for Level 4 trials. (With the exception that the O/Cs filled the roles assigned to TF 2-33 Armor, the workstation and CP staffing structures for the first Level 3 trial week were very similar to those shown in Figure 7.) Figure 8 shows the CP staffing structure for Level 4 trials. (The second Level 3 trial week matched Level 4 staffing structures.) Appendix B contains diagrams of the digital device network structure.

The training events shown in Table 8 for Level 3 and 4 trials are discussed below. The Introductory Briefing was presented by the SIMUTA-D team using overhead slides to illustrate major points. The Introductory Briefing included:

1. Background information for the project.

2. A statement of the objectives for the SIMUTA-D program and the FE.

3. A task summary list for each mission.

Company/Team A		
EQUIPMENT	TF 2-33 PER	O/C Team
IVIS B2C2 FED 3 Radios (CB)	Commander 1SG/FSO	Puckster

TF Commander		
EQUIPMENT	TF 2-33 PER	O/C Team
IVIS B2C2 IFSAS 3 Radios (CB)	TF Commander FSO NCO	Puckster

Fire Support		
EQUIPMENT	TF 2-33 PER	O/C Team
IFSAS 2 Radios (CB)	FS SME	Puckster

Company/Team B		
EQUIPMENT	TF 2-33 PER	O/C Team
IVIS B2C2 FED 3 Radios (CB)	Commander 1SG/FSO	Puckster

TF S3		
EQUIPMENT	TF 2-33 PER	O/C Team
IVIS B2C2 3 Radios (CB)	S3	Puckster

Combat Service Support		
EQUIPMENT	TF 2-33 PER	OC Team
2 Radios (CB)	None	Puckster

Team C		
EQUIPMENT	TF 2-33 PER	O/C Team
IVIS B2C2 FED 3 Radios (CB)	Commander 1SG/FSO	Puckster

Scout Platoon		
EQUIPMENT	TF 2-33 PER	O/C Team
IVIS B2C2 FED Radio (CB)	Scout Platoon Leader	Puckster

HACC/Brigade		
EQUIPMENT	TF 2-33 PER	O/C Team
2 B2C2 IFSAS ASAS 4 Radios (CB)	4 Operators	4 Brigade Interactors

Company D		
EQUIPMENT	TF 2-33 PER	O/C Team
IVIS B2C2 FED 3 Radios (CB)	Commander 1SG/FSO	Puckster

CONWOR		
EQUIPMENT	TF 2-33 PER	O/C Team
3 Radios (CB)	None	Exercise Controller Puckster

Team Engineer		
EQUIPMENT	TF 2-33 PER	O/C Team
IVIS B2C2 FED 3 Radios (CB)	Engineer Commander 1SG	Puckster

OPFOR		
EQUIPMENT	TF 2-33 PER	O/C Team
Radio (CB)	None	Puckster

OPFOR		
EQUIPMENT	TF 2-33 PER	O/C Team
Radio (CB)	None	Puckster

Used only in DATK.

Figure 7. The device and staffing configuration for Janus-A workstations.

4. An overview of the digital devices and their advantages.

5. A depiction of the radio net structure.

6. A statement of the SIMUTA-D Level 4 SOP which instructed TF 2-33 Armor to: (a) role play realistically, (b) execute each mission as written, (c) cease using the digital devices only in the event that their particular company became engaged, and (d) remain focused on the digital aspects of training. The SOP also instructed the O/Cs to use the observation forms as intended.

7. A schedule for the week.

8. Administration and signing of Privacy Act Statements to all participants.

Level 3 piloting was first conducted on October 17th, 18th, and 19th of 1995. Essentially, the MTC mission was run three times during the week with the O/Cs role playing unit staff positions. Significant problems were experienced with the digital devices during the Level 3 MTC pilot trials, ranging from having an insufficient number of B2C2 platforms to lacking IVIS software altogether. To compensate for the insufficient number of B2C2s, only one was assigned to the four

MAIN CP - OPERATIONS & INTELLIGENCE			
EQUIPMENT	PLAYER PERSONNEL		O/C Team
IVIS B2C2	XO	FSO	Main CP Observer
ASAS	S3 Air	Chemical Officer	S3 Section Observer
3 X Radios (CB)	S2		S2 Observer

MAIN CP - FIRE SUPPORT			
EQUIPMENT	PLAYER PERSONNEL		O/C Team
IFSAS	Engineer	FS NCO	FSS Observer
3 X Radios (CB)	FS NCO	FS NCO	

CTCP			
EQUIPMENT	TF 2-33 ARMOR PERSONNEL		O/C Team
IVIS B2C2	S1	PSNCO	CTCP Observer
3 X Radios (CB)	S4	S4 NCO	

Figure 8. The command post staffing structure.

Company Commanders. During the first Level 3 MTC trial, it became evident that the O/Cs needed additional training on the digital devices to successfully role play the unit and to serve as O/Cs during the Level 4 FE trials. In response, a refresher training course on B2C2 was presented by a digital SME after the first MTC training exercise was completed. However, O/C device proficiency became such an issue that the refresher training was only conducted in a formal manner during the first Level 3 trial week since subsequent Level 3 and 4 trials relied on TF 2-33 Armor participants to operate the digital devices (the Results and Discussion chapter discusses this issue in greater detail). The O/C rehearsals, were scheduled to be conducted either in the morning or at the end of the day when TF 2-33 Armor was not present. Whether or not rehearsals were conducted was ultimately determined by the O/Cs. (See the Results and Discussion chapter for elaboration.) Several approaches were tried out for the unit rehearsals. The most accepted approach evolved by the Level 4 trials and consisted of a briefing by the TF Commander and a run through of the mission using Janus-A and the available digital devices. This approach featured the S2 operating the OPFOR with friendly weapon systems enabled. Due to problems with digital device configuration, device availability, and the device skill level of the O/Cs, no training evaluation questionnaires were administered during the Level 3 MTC trials. By the end of the week, hot wash and observational data had been collected. These data were used to modify the MTC TSPs. Modifications relevant to the other mission TSPs (including SIMNET) were made to ensure consistency.

Level 3 trials for the DIS mission occurred on November 17th, 20th, and 21st of 1995. The number of B2C2s for these trials was also insufficient and IVIS software did not arrive in

time for installation. Because of the problems encountered, there was only enough time to run the DIS mission. To address the O/C's lack of proficiency with the digital devices, TF 2-33 Armor filled the unit role positions and the O/Cs performed their normal duties. Thus, these Level 3 pilot trials of the DIS mission actually mirrored the Level 4 FE trial staffing requirements and role assignments. Figure 9 shows the O/C and TF 2-33 Armor staffing requirements for these and subsequent Janus-A trials. By the end of the week, data from the hotwashes, observations, and training evaluation questionnaires had been collected and were used to modify the DIS TSPs and data collection instruments. Again, modifications relevant to the other mission TSPs (including SIMNET) were made to ensure consistency.

TF 2-33 Armor

POSITION	NUMBER
TF Commander[1]	1
B2C2 Operator[2]	1
TF XO	1
TF S31	1
B2C2 Operator[2]	1
Scout Platoon Leader[1,2,4]	1
FS SME/Mortar Platoon Leader[4]	1
S1[2]	1
PSNCO	1
S2[3]	1
S3 Air[1]	1
Chemical Officer[2]	1
Operations NCO	1
TF FSO	1
FS NCO	3
S4[2]	1
S4 NCO[2]	1
Company/Team Commander[1]	4
Company/Team 1SG[2]	4
Company/Team FSO[4]	4
Total	31

O/Cs

POSITION	NUMBER
Exercise Controller	1
Command Group O/C	1
Main CP O/C	1
S2 O/C	1
S3 Section O/C	1
FS O/C	1
FS O/C/I[4]	1
CTCP O/C	1
CSS Interactor	1
OPFOR	2
HACC[2]	4
Pucksters	9
Total	24

Notes:
1 - Uses IVIS
2 - Uses B2C2
3 - Uses ASAS
4 - Uses IFSAS/FED

Participants not able to operate an assigned digital device required a device operator.

Figure 9. The Level 4 staffing requirements.

Figure 10 shows the schedule of events for Level 4 trials. Level 4 trials for each mission spanned a four day period from December 4th to December 7th 1995 and were run in the

following order: (a) DATK, (b) DIS, and (c) MTC. Only minimal set-up time was required since the devices were still configured from the last Level 3 trial. The IVIS software was available and additional B2C2 platforms had arrived by the time the DATK trial began. All missions underwent a FE as planned. Data collection forms were retrieved from the SIMUTA-D team at the end of each day and reviewed for completeness. The training evaluation questionnaires were administered once, at the end of the trial week. Note that the O/C Refresher Training was incorporated into the schedule to allow the O/Cs to receive additional training on the digital devices and that the scheduled O/C rehearsals were not conducted.

MONDAY 4 December	TUESDAY 5 December	WEDNESDAY 6 December	THURSDAY 7 December	FRIDAY 8 December
0800-1000 O/C Refresher Training	0800-1030 DATK Training Exercise	0800-1000 Unit Rehearsal	0800-1000 O/C Rehearsal	0800-0820 Battalion AAR Preparation
1000-1200 O/C Rehearsal	1030-1045 Break	1000-1230 DIS Training Exercise	1000-1200 Unit Rehearsal	0820-0920 Battalion AAR
1200-1300 Lunch	1045-1100 Command Post AAR Preparation	1230-1330 Lunch	1200-1300 Lunch	0920-1020 Mission Hotwash
1300-1345 Introductory Briefing	1100 -1120 Command Post AARs	1330 -1345 Command Post AAR Preparation	1300-1530 MTC Training Exercise	1020-1100 Training Questionnaires
1345-1600 Unit Rehearsal	1120-1220 Lunch	1345-1405 Command Post AARs	1530-1545 Break	
	1220-1240 Battalion AAR Preparation	1405-1425 Battalion AAR Preparation	1545-1600 Command Post AAR Preparation	
	1240-1340 Battalion AAR	1425-1440 Break	1600-1620 Command Post AARs	
	1340-1440 Mission Hotwash	1440-1540 Battalion AAR		
	1440-1455 Break	1540-1640 Mission Hotwash		
	1455-1700 O/C Rehearsal			

Figure 10. The Level 4 trials schedule.

Each Level 4 training exercise was scripted with both O/Cs and TF 2-33 Armor participants filling specific roles and responsibilities. All participants received role playing instructions. The O/C team led the AARs with the Senior O/C running the Battalion AAR. The unit and the O/Cs

reported during the preceding trial weeks that the sections did not require an AAR since, in most cases, there was only one person per staff section. Thus, there were no Section AARs conducted during the Level 4 trials. Originally, the training evaluation questionnaires were designed to be administered at the end of each training mission. However, by the end of the Level 3 DIS trial week, the SIMUTA-D team determined that requiring the O/Cs and TF 2-33 Armor participants to fill out essentially the same questionnaire multiple times would be a potentially frustrating and fatiguing process that could affect the questionnaire responses (especially for the second and third Level 4 trials). Thus, the SIMUTA-D team modified the original questionnaires so that training feedback could be gathered at the end of the final Level 4 trial. Immediate feedback on the training exercises was always captured at the end of each Battalion AAR during the hotwash sessions. Led by the SIMUTA-D team, both O/Cs and TF 2-33 Armor members participated in the hotwashes. Hotwash questions were generally tailored to each mission. The SIMUTA-D team manually transcripted all hotwash responses.

Data reduction and analysis. The FE data were drawn from questionnaire responses, interview comments, and observations. Being subjective in nature, these data did not support formal statistical analysis procedures. Consistency plus practical value constituted the main dimensions for identifying key findings and generalizations. The basic approach to gleaning results from the data was to initially review summarized data for trends and then adopt an informal content analysis approach to further guide classification of the data into meaningful categories. A discussion of the major findings from the FE appears below.

Results and Discussion

Major Findings

The FE focused on two participant groups: the O/Cs and the TF training unit. The SIMUTA-D team collected observational data throughout the conduct of the training and administered questionnaires to participants upon completion of the three training missions. Questionnaires asked participants to rate various aspects of the TSPs and to provide comments and suggestions for improvement. As their roles and questionnaires differed, the results appear separately for each group. Where appropriate, this chapter includes data from the FE observers which provide additional information on participant responses and comments.

Emphasis is placed on participant comments rather than on quantified ratings. Given the statistical limitations of the questionnaires as described above (coupled with the small number of respondents), these comments better reflect the information gathered during the FE and provide more explicit guidance for TSP revision. Rating frequencies are found in Appendix C, which also contains the TF and O/C comments.

The SIMUTA-D team worked with the TF and O/C teams throughout the development and FE process and implemented TF and O/C comments and suggestions, where appropriate, throughout the program. Comments judged to address the unit's training benefit or have relevance to the digitized battlefield were generally implemented. An important consideration is that the O/C team received little training in device usage and was unfamiliar with the impacts

associated with the insertion of automated C3 devices. This lack of experience (an exception being the FS O/Cs using IFSAS) may have fueled many of the O/C comments, but should not be overlooked as future O/C teams (including O/C teams at other installations) may require additional support with regard to digital device training.

O/C Results

The roles of the seven O/Cs who completed the questionnaires were: Command Group observer, Main CP observer, S2 observer, Combat Trains Command Post (CTCP) observer, FS observer, Higher Headquarters and Adjacent Unit Control Cell (HACC) interactor, and FS interactor. The O/C questionnaire primarily asked participants to comment on the materials in the TSPs provided for their use. Additionally, questions asked for comments on the training missions and the extent to which the training exercise provided insight into coaching requirements and prepared them to function as controllers.

TSP quality. Questions regarding the quality of the TSPs addressed freedom from error, ease of use, level of detail, and the extent to which they supported O/C responsibilities. Respondents provided recommendations for improvement.

All respondents rated the overall quality of the TSPs (i.e., presentation format, understandability, errors, reading level) "So-So" (the mid-point on a five-point scale ranging from "Very Good" to "Very Bad"), or better. Comments pointed to a few specific errors. Additionally, O/Cs marked up copies of the TSP materials for correction, so it is evident that some errors were present during the FE. All but one O/C indicated that the TSPs were easy to use and that they supported mission responsibilities.

Nearly as many people rated the level of detail for each mission package as "appropriate," as rated it "inappropriate". Comments indicated the intelligence products, graphics, and OPORDs lacked the necessary detail. Other comments echoed concern about the extent to which O/Cs had the information needed to conduct the mission. The three O/Cs who responded that there was not enough detail indicated a need for greater detail in the OPORD and the FS materials. The O/Cs also indicated that they lacked information on how to operate the digital devices. While instruction on digital device usage was beyond the scope of the SOW, it was a recurring theme throughout the FE.

Overall, the results indicate that the O/C materials needed some improvement. Ratings were only slightly more favorable than unfavorable. The marked up TSPs and O/C comments pointed to directions for improvement.

O/C Observation Forms. Observation forms are a critical component of the O/C materials. They provide the observational data from the conduct of the mission used to structure AAR and THP feedback. Only O/Cs functioning as observers used the observation forms. Thus, only five O/Cs responded to these questions.

All five O/Cs functioning as observers indicated that they understood the purpose of each form, that they were easy to use, and that they adequately reflected critical scenario events. Two observers indicated that the level of detail was not appropriate with regard to the use of digital devices and that instead of focusing on *if* the TF used the devices, they should focus on *how* they used them. For example, one O/C expressed interest in recording what the S2 did with the information he received (both within the CP and as sent to the TF Commander) and how it contributed to his development of the enemy situation.

Concern with use of the digital devices appeared throughout this section of the questionnaire and while it was the same observer repeating the comment, it was echoed by requests for additional detail on the use of digital devices. These two comments were in response to questions regarding whether the observation forms helped focus teaching points (three O/Cs felt they did) and whether they supported the development of AARs (again, three O/Cs responded that they did). Suggestions for improvement again voiced the need for elaboration on digital device usage and added that tracking events by game time would be useful. While there was nothing in the forms that precluded the observer from recording additional detail, explicit guidance to attend to and record additional aspects of device usage would improve their usefulness.

Data from the FE observers indicate that only one of the O/C observers actively used the observation forms and that was only during the DIS mission. Other observers used index cards or a standard communications log for recording observations/information. They did, however, sometimes use the forms as a reference or as an aid to following scenario events.

It is difficult to draw conclusions from the somewhat favorable ratings for observation forms and the fact that all but one O/C did not use them as intended (even with reminders to do so). One could speculate that index cards were the form of choice because of their familiarity and convenience (with regard to size). However, additional information is required. Thus, it is not clear that implementing recommendations for improvement will result in increased usage.

<u>AAR development</u>. Questions regarding AAR development focused on whether the O/C team had the materials necessary to develop AARs that address the digital capabilities of the C3 devices. All O/Cs responded to these questions as each played a role in developing and conducting AARs. Given their focus on increased support regarding digital devices, it is not surprising that only one O/C indicated having the necessary materials to conduct AARs that incorporate digital capabilities. As when interviewed during the FEA, the O/C team strongly voiced the need for an automated data capture device (either real-time or after the fact) to provide the content of digital communications, tied to critical scenario events and/or game time. Two comments addressed non-equipment requests: (a) Greater detail in critical subtasks and (b) tasks, conditions, and standards that support an appropriate focus on digital device comments.

When asked how the TSPs could better support the development and conduct of AARs, O/Cs generally replied that credible AARs addressing use of the digital technologies cannot be conducted until the development of TTPs for the digitized battlefield progresses further. That is,

without doctrine to use as a standard and without the knowledge and experience of digital devices, O/Cs cannot instruct units on achieving the standards or using the devices.

The development of AARs that incorporate digital capabilities is probably the weakest link in SIMUTA-D (the TF repeated this concern), although the weakness does not lie only in the TSPs. Several factors bear on this issue. First, the O/C team needs full training on the operation of digital devices, experiencing the benefits and the frustrations that come from their use. Only then will the O/Cs be qualified (and, importantly, feel that they are qualified) to coach and critique units on device usage. Second, the O/Cs need more mature and more detailed TTPs (including digital tasks, conditions, and standards) to comfortably coach and critique units on the execution of tasks involving digital device usage. Currently, O/C teams use established doctrine and tactics as their basis for teaching, coaching, and mentoring. To expect that they can successfully execute these activities without such a basis for the digitized battlefield represents an unrealistic requirement. Third, the insertion of automated C3 devices alters the way in which O/Cs acquire information. During conventional training missions, O/Cs eavesdrop on the appropriate nets to follow battlefield events and to gain information with which to teach, coach, and mentor. However, during the Level 4 trials, radios were plentiful but digital devices were not. Thus, the O/C team generally lacked the means to acquire information critical to the conduct of an AAR focused on the capabilities of the C3 devices. (See the Lessons Learned and Program Extensions sections for additional discussion of data collection issues.)

Participation in the formative evaluation. All but one O/C indicated that participation in the FE resulted in an increased awareness of additional tasks that would benefit from coaching. Several of the O/Cs indicated that the digital devices required coaching and acknowledged the difficulty of serving as coaches without knowing how to use and apply the devices themselves. Main CP observers also reported a greater awareness of coaching requirements for intelligence tasks. Specifically, the need to cue the use of intelligence assets, the need to facilitate the use of information in building and sharing the enemy picture, and the need to facilitate decision making (e.g., enemy disposition) on the basis of partial information were cited.

Finally, two questions addressed the O/C team's level of preparedness for the training missions before and after the FE . While most responded that they were ready both before and after the FE, a comparison of these ratings indicates that two O/Cs felt that they were better prepared after the FE.

Looking across all responses and comments, the O/Cs' participation in the FE was clearly beneficial. The O/Cs' experience with SIMUTA-D provided insight into the benefits and challenges of training soldiers for the digitized battlefield. Their participation also provided valuable input to the SIMUTA-D team for the refinement of TSP materials.

Training missions. As O/Cs were closely involved with scenario execution, either as observers or interactors, they provided suggestions for improvements to the training missions. Their comments are grouped according to mission, with two comments common to all missions. The first overall comment indicated the need to complete the mission through the consolidation and reorganization phases. While each mission concluded with a consolidation and

reorganization phase, the TF had lost between 75% and 90% of its combat effectiveness at that point, precluding the ability to conduct the phases. (The TSPs call for the O/Cs to decide if and when consolidation and reorganization takes place.) The second suggestion for improvement across the three missions was to improve FS materials and information to better support the maneuver missions. Training and scenario developers reviewed all suggestions. As the current FS materials were based on established materials from previous SIMUTA programs and the comment did not relate to the insertion of digital devices, the scenarios were not changed.

The O/Cs made several suggestions for improving each of the missions, yet few related to digital device insertion. The SIMUTA-D developers corrected all errors and evaluated comments for their ability to improve the training benefit or their relevance to the digitized battlefield. Generally, when the team judged comments as tactical preferences or enhancements they did not implement a change. Implementation resulted from comments that related directly to the unit's ability to conduct the mission. Requests for a better enemy picture and a decision support template (DST) are examples of the types of comments that developers judged as directly related to the unit's ability to conduct the mission. Table 9 illustrates O/C suggestions for improvement that relate to each scenario and indicates implementation decisions. Appendix D presents a rationale for each suggestion not implemented.

Task Force Results

Twelve TF members completed questionnaires, their roles were: TF Commander, Executive Officer (XO), S1, S2, S3, S4, fire support officer (FSO), Company/Team Commander (4), and Scout Platoon Leader. Similar to the O/C questionnaire, the TF questionnaire asked participants to rate specific aspects of the TSPs and recommend improvements. The questionnaire asked the TF to comment on rehearsal methods; digital tasks, conditions and standards; scenario materials and staffing; AARs; training missions; and training benefit.

Rehearsal methods. To provide the necessary practice in the use and implementation of digital devices, the SIMUTA-D team determined that a rehearsal method incorporating digital devices was necessary. Thus, three rehearsal methods incorporating digital devices were trialed. Table 10 provides the characteristics of each rehearsal method. All methods employed an orders briefing and a preview of the relevant mission, via Janus. One distinguishing characteristic included the device used to display the mission. That is, missions were displayed at either the overhead Controller Workstation (CONWOR) device on a single projector screen or at the individual Janus workstations. The former allowed the TF to view the mission as a unit and exchange comments and ideas in a common forum. The latter enabled each TF member to interact with the mission as they would during execution. A second distinguishing characteristic related to whether elements involved in the preview mission were friendly units only or friendly and enemy units with combat multipliers (e.g., artillery). The final characteristic addressed control of the OPFOR units and the availability of friendly fire power.

Table 9

O/C Comments for Improving the Training Missions and Implementation Decisions

MISSION COMMENTS	IMPLEMENTED
Common to all Missions	
Complete the consolidation and reorganization phases.	N/A (As defined in the TSPs, this is an O/C decision.)
Improve FS materials and information to better support maneuver missions.	No
Deliberate Attack	
Provide alternatives for two courses of action.	No
Provide more combat multipliers.	Yes
Require TF to pass follow-on units.	No
Add a forward and main aid station to Janus screen.	Yes
Add a forward logistics element.	Yes
Designate lanes for East - West movement.	Yes
Provide better enemy picture.	Yes
Improve intelligence build-up.	Yes
Provide a DST (conventional).	Yes
Add NBC.	No
Defense in Sector	
Provide smaller sectors.	No
Change defending terrain, site obstacles in-depth to force enemy into engagement area.	Yes
Develop and execute a counterattack.	No
Provide more artillery.	No
Add a forward and main aid station to Janus screen.	Yes
Add a forward logistics element.	Yes
Designate lanes for East - West movement.	Yes
Movement to Contact	
Provide indirect fire support.	No
Use NBC.	No
Move artillery to cover Falcon sector.	No

Table 10

Rehearsal Methods Employed During the Formative Evaluation

MISSION	DISPLAY DEVICE	ELEMENTS	OPFOR CONTROL
1 - Deliberate Attack	Controller Workstation	Friendly	N/A
2 - Defense in Sector	Janus Workstation	Friendly, Enemy, Combat Multipliers	O/C
3 - Movement to Contact	Janus Workstation	Friendly, Enemy, Combat Multipliers, Friendly Fire Power	TF S2

The first rehearsal method was the least preferred as it merely served as a reconnaissance. The second method was an improvement, but did not allow the TF to wargame the mission, as they did not control the OPFOR. The third method, conducted at the Janus workstations with all elements present and the OPFOR controlled by the TF S2, was the preferred method. This method allowed the TF to view the terrain, practice execution and digital device usage, and wargame alternatives. While the TF preferred this method, several recommendations for rehearsal improvements exist that relate to the O/C team's involvement in the unit rehearsals. The O/Cs did not attend the SIMUTA-D TF rehearsals; however, during normal conduct of a Virtual Training Program (VTP)[3] exercise, the O/C team controls conduct of the unit rehearsal. It is not clear why the O/Cs did not participate in the unit rehearsals. Possibilities include: (a) they did not understand their role in the rehearsal process and/or (b) their uncertainty about digital device usage made them hesitant to conduct the unit rehearsals. An advantage to their involvement is a more disciplined approach to the rehearsal: The O/C could clearly state the rehearsal objectives, keep the unit focused on those objectives, and stop the rehearsal to illustrate teaching points. Upon completion of the rehearsal, the O/C could lead a discussion of what did and did not work, and why. This discussion could also focus on digital device usage and how it influences critical tasks and/or the mission. Additionally, the TF should focus more on the conduct of staff tasks during rehearsals. The involvement of an O/C would provide coaching to the TF, allowing for the opportunity to redirect attention to critical staff tasks. Thus, ensuring that the unit attends to the proper tasks during rehearsals is an important role for the O/Cs.

Training events. The questionnaire asked the TF to comment on whether the training events provided the opportunity to exercise tasks, conditions, standards, and digital capabilities. Prior to each mission, the tasks, conditions, and standards were provided to the TF. (TF 2-33 Armor's tactical SOP was reviewed for techniques but the SIMUTA-B task lists were taken from

[3] The RCVTP was designated the VTP in 1994, all VTP work post-dating the original SIMUTA TF effort will be referred to as such.

the relevant ARTEPs). When asked if training events provided the opportunity to exercise these tasks, conditions, and standards, responses varied across missions. Half of the TF respondents agreed that they did in the DATK and DIS missions, with only two and three respondents disagreeing, respectively (the remainder neither agreed nor disagreed). Nine respondents agreed (one, strongly) and three neither agreed nor disagreed for the MTC mission. Suggestions for improvement were consistent with these ratings, with the fewest offered for the MTC mission. The MTC was the most mature mission, having been executed under previous SIMUTA programs and Focused Dispatch. (The original SIMUTA and Focused Dispatch efforts executed a previous version of the DIS mission, but major modifications were made before it was delivered to SIMUTA-D.) The MTC mission may have received better ratings due to the TF's familiarity with it and the fact that they were also more successful in this mission. The limitations of the digital devices, as discussed in the Method chapter of this report, may have also influenced these responses. For example, since the MTC was the last mission conducted, many of the training and device shortfalls initially experienced may have diminished by the time the MTC FE trial was run.

Only one participant agreed that the DATK and DIS training provided adequate opportunities to exercise the digital capabilities and some disagreed (three, DATK and two, DIS), most strongly (three, DATK and four, DIS). While four participants agreed that the MTC training events exercised digital capabilities, most did not (five neither agreed nor disagreed, one disagreed, and two strongly disagreed). Interviews conducted during the FEA and comments from participants indicated that the greatest digital advantages come in the planning, preparation, consolidation, and reorganization phases of battle. Thus, these ratings could reflect the missions' focus on execution (while each mission included a consolidation and reorganization phase, it was not executed due to the combat ineffectiveness of the TF at those phases). The ratings may also be affected by the TF's own operating procedures which call for voice only communication once enemy contact is made. This limited the opportunity to use the digital devices during execution. The SIMUTA-D SOP called for voice only communication when a particular company became engaged in enemy contact, with the remainder of the BN/TF continuing digital communications. This disconnect between the TF and SIMUTA-D SOPs reflects the evolving nature of the TTPs for battlefields equipped with automated C3. The SIMUTA-D TSPs are flexible enough to accommodate a particular training unit's SOP; though, training audiences should carefully consider the extent to which they need to exercise digital use of the available training devices when determining their SOPs.

Staffing. The questionnaire asked the TF to respond to the appropriateness of staffing in the command areas (i.e., CPs). Eight TF participants agreed that their command area had been appropriately staffed (four did not). Where they did not agree, the primary reason was the additional burden of digital device operation. For example, the Main CP requested more staff to better utilize ASAS and the FSO requested better trained IFSAS and Forward Entry Device (FED) operators. The Company/Team Commanders did not indicate that they were understaffed. The O/C team operated the Janus workstations while the Commander, 1SG, and FSO operated the digital devices that they would have in their actual vehicles. This proved to be an ideal method for the Company/Team set-up. The TF Commander requested IFSAS and ASAS capabilities.

Coaching. The TF responded to questions concerning the coaching they received from O/Cs during each mission. Specifically, they were asked if the coaching had facilitated the conduct of staff tasks. Across all three missions, the TF was fairly ambivalent (most were neutral and only slightly more agreed than disagreed). Comments indicated that in order for the O/Cs to effectively coach staff tasks, they would have to be digitally capable. Observational data from the SIMUTA-D FE team indicated that very little O/C coaching occurred, except within the CTCP. The CTCP may have been exceptional for two reasons. First, the O/C who manned the CTCP was skilled in coaching techniques and used the O/C observation forms (during the DIS mission). Second, the CTCP configuration may have better supported the O/C's duties. That is, the CTCP had fewer people in it, doing fewer things. Thus, in comparison to the Main CP, there were fewer observation and recording demands on the CTCP O/C.

Scenario materials. While most (ten) of the TF felt that the OPORDs and graphics provided the necessary information to execute the orders, there were several suggestions for improvement. These suggestions focused on the need for additional intelligence information (e.g., DST, event template, reconnaissance and surveillance [R&S] plan, etc.) and a more detailed FS plan.

Training missions. The TF suggestions for improving the training missions were similar to O/C suggestions, including the paucity of MTC suggestions. Again, this may be due to the TF's familiarity (and success) with this mission. The DIS mission implemented under the original SIMUTA effort and Focused Dispatch had changed significantly before the SIMUTA-D team received it. Training and scenario developers reviewed suggestions for improvements to determine the need for implementation.

Suggestions generally addressed the need for doctrinally sound plans and the increased use of combat multipliers. The importance of doctrinally sound plans, in addition to being a requisite of training, is important in gaining the confidence of the training unit. The SIMUTA-D missions are doctrinally sound. However, sufficient ambiguity in doctrinal interpretation (i.e., tactics) existed to cause the TF to question the validity of the tactics displayed in the plans. Doctrinally sound guidelines, such as the following, characterize the SIMUTA-D missions:

1. Select terrain that lends itself to a clear course of action or maneuver, obstacle planning, FS, task organization, and C3.

2. Make enemy intentions identifiable and predictable.

3. Script OPFOR to act according to doctrine.

Table 11 presents specific suggestions for improvement to the training missions. Suggestions not implemented reflect the need for further doctrine development or differences in doctrinal interpretation for the digitized battlefield; other suggestions for TSP refinement generally were implemented. Rationales for those suggestions not implemented appear in Appendix D.

Table 11

Task Force Comments for Improving the Training Missions and Implementation Decisions

MISSION COMMENTS	IMPLEMENTED
Common to all Missions	
Provide enemy situation, DST, R&S plan for Unmanned Aerial Vehicle (UAV).	Yes
Synchronize graphics with OPORD.	Yes
Provide more detailed FS plan.	No
Develop digital traffic checklist across BOS, device, staff, task, and events.	Yes
Construct scenarios that can't be done without using digital devices.	N/A (doctrine issue)
Provide more information via ASAS.	
Complete consolidation and reorganization phases.	N/A (As defined in the TSPs, this is an O/C decision.)
Deliberate Attack	
Remove OPFOR superiority in weapons, intelligence, C3, and flexibility.	Yes
Sweep from left does not work, better to conduct a turning movement.	No
Re-write order, as it does not allow TF to separate the enemy and defeat him a platoon at a time; flank is exposed.	No
Provide more combat multipliers.	Yes
Defense in Sector	
Remove OPFOR superiority in weapons, intelligence, C3, and flexibility.	Yes
Change graphics to provide mutually supporting sectors of fire.	Yes
Provide time and terrain to mass fires in engagement area and to displace.	Yes
Movement to Contact	
Intelligence changes needed.	No

The effective use of combat multipliers (e.g., indirect FS, intelligence, close air support, and C3) can be the deciding factor in battlefield outcomes. The ability to apply effective combat

multipliers is a function of information from the maneuver element and HACC, processed through the staff. Thus, in addition to increasing the likelihood of success, the use of combat multipliers exercises staff tasks, thereby increasing the value of the training. Additional combat multipliers were added to the DATK mission. The improvements made to training missions highlight the need for formal evaluation of training missions.

AARs. The TF rated the effectiveness of the CP and TF AARs, including the extent to which they focused on improving performance and addressed the use of digital equipment. The TF also provided suggestions for improvement. The pattern of ratings and suggestions for improvement were very similar for the CP and TF AARs. As such, discussion will focus on combined results (Appendix C contains rating scale frequencies for each AAR type). The TF generally agreed that the AARs focused on improving performance: six (of seven) agreed for CP AARs and ten (of twelve) agreed for TF AARs. However, fewer agreed that improvement was forthcoming: only four agreed for CP AARs and eight agreed for TF AARs. This is probably due to the fact that the TF did not believe that AARs focused on the application of digital devices. Thus, their benefits were largely in the conventional, tactical execution arena. In fact, review of execution comprised much of the TF AARs. While CP AARs tended to focus more on staff interactions and the use of information, they did not focus on digital device application. However, FE observer data indicate that the focus on digital device application increased as the week progressed. TF comments were consistent with O/C comments in that they (the O/Cs) lacked the tools and experience to develop and conduct AARs that address use of the digital devices. Suggestions for improvement primarily requested more discussion of digital device usage (which device, when, and why), the integration of digital information, TTPs for the digitized battlefield, and the inclusion of data capture tools to aid in the development of AARs for digital capabilities.

Other suggestions addressed the format for identifying sustain and improve tasks. During the conduct of CP AARs, the O/Cs employed no particular format. The O/Cs identified the sustain and improve tasks, then asked the staff to provide their own list--with no organizing framework for this activity. On the other hand, during the TF AAR, the Senior O/C solicited sustain and improve tasks from the TF and used the seven BOSs as an organizing framework. The TF suggested that other frameworks might improve the discussion of digital devices and staff tasks. For example, the TF Commander suggested that the TF AAR be organized by staff position and digital device.

Training benefit. Throughout this chapter the same limitations to effective coaching and the development/conduct of AARs are discussed. The lack of device fidelity, functionality, and connectivity, along with a lack of device training, were voiced throughout the week and cited on the questionnaire as impediments to training benefits. These limitations also impact the overall training benefit of the TSPs, as implemented during the FE. Thus, it is not surprising that only one TF participant agreed that he was better able to apply digital equipment on the battlefield after the FE. However, like the O/Cs, two TF participants felt that their unit was more proficient on the digitized battlefield after the FE.

Summary

The FE data point to areas of improvement for the TSPs, highlight the value of conducting a FE, and illustrate the challenges of digital device training. The O/Cs identified areas where the TSPs needed more detail and indicated a need for additional training on digital device operation. Areas critical to the development of AARs that incorporate digital capabilities include O/C digital device proficiency, established TTPs for the digitized battlefield, and automated data collection devices. Most TF members agreed that the scenario materials included in the TSPs provided the necessary information to execute each mission order. Overall, the TF data provide guidance for the conduct of effective rehearsals and offer suggestions for making improvements to the TSPs and the AAR process. While staffing levels for most command areas were adequate, comments indicate that the digital devices placed an additional burden on staffing, which could be addressed by providing qualified device operators. As with the O/C data, the TF questionnaire data highlight the importance of establishing TTPs for the digitized battlefield and ensuring that O/Cs receive adequate training on the digital devices. These factors link to effective O/C coaching and the AAR process.

Lessons Learned

The major technical objectives of the SIMUTA-D project were addressed by: (a) using the VTP model at BN/TF level as a platform for inserting digitization into three SIMUTA-B TSPs for application in SIMNET and Janus simulation environments, (b) conducting a FE of the SIMUTA-D training program, and (c) documenting the program's methodology, results, and lessons learned in this research report. The purpose of this section is to highlight the lessons learned for the current effort. Specific examples for improvements to the SIMUTA-D program or others like it appear below.

Coordination Requirements

Because SIMUTA-D placed requirements on numerous agencies, the coordination requirements for every program milestone represented a significant planning factor. Agencies that required coordination included the ARI, MBBL, STRICOM, TF 2-33 Armor, 4/16 Cavalry, 5/16 Cavalry, the Armor School, and the G3 Office. In addition, every digital device belonged to an agency and generated its own coordination requirements. The COR helped with coordination requirements with agencies such as the G3 office which fielded all requests for access to the Janus facility. Troop support requirements were generated early in the development process. Still, it was difficult to find periods of uncommitted time for both the O/Cs and TF 2-33 Armor, and late minute directives/activities often threatened to jeopardize the time that was scheduled.

The most serious consequence of the coordination requirements was the inability to secure calendar time and technical support for SIMNET Level 3 and Level 4 trials. After several coordination meetings and formal correspondence between the MBBL, ARI, STRICOM, and the rest of the SIMUTA-D team, it was determined that the SIMNET schedule and technical support could not accommodate the SIMUTA-D time frame. Also, it was not certain whether funds to support additional SIMNET trials would be available. Limited access to IVIS and B2C2 gained

through TF 2-33 Armor's Digital Learning Center, supported efforts since it was not feasible for SIMUTA-D to procure all of the digital devices from outside agencies for TSP development.

Certainly, future efforts of this magnitude should look for ways to simplify the coordination requirements. However, a small suite of digital devices procured for the entire length of the effort and placed in an area configured identically (or in miniature version) to the set-ups required for SIMNET and Janus (including dedicated OPFOR workstations) would make a real difference. While not a simple task, this would provide increased opportunities for device training, primarily benefiting the O/C team. As it was, much of the O/C device training occurred through discovery learning during the training exercises. This was not the same issue for TF 2-33 Armor since it had access to IVIS and B2C2 through its Digital Learning Center (which the SIMUTA-D team also used on a limited basis). In addition, most of the unit players were already experienced with the digital devices. Ideally, a limited procurement of the digital devices would provide O/Cs and unit personnel with increased opportunities for device training in the appropriate simulation environment (i.e., Janus-A and SIMNET). At the same time, the training developers could use the devices to support their efforts.

TSP Development

The SIMUTA-D SOW (ARI, 1995) called for accomplishing the project's objectives by converting the RCVTP SIMUTA TF level TSPs for digital application. Ongoing work to upgrade and improve the SIMUTA-B missions led the SIMUTA-D team to the decision to use the most current SIMUTA (i.e., SIMUTA-B) TSPs as the baseline for SIMUTA-D development. The primary advantages to this approach were that: (a) the SIMUTA-D TSPs would be based on the latest efforts of the SIMUTA team, and (b) the SIMUTA-B and SIMUTA-D TSPs would have a high degree of congruence. Given that congruence between many of the VTP programs (e.g., COBRAS, SIMBART, and SIMUTA-B) has surfaced as an important issue, it seemed logical to maintain congruence to the extent possible between the SIMUTA-B and SIMUTA-D TSPs. The approach for converting the SIMUTA-B TSPs for the SIMUTA-D program was presented in the SIMUTA-D research plan (BDM, 1995b). As stated above, there were clear, long-term advantages to using the SIMUTA-B TSPs as the foundation for SIMUTA-D TSP development. However, as the following discussion reveals, the advantages were not always realized. Many of the lessons learned described below relate to using the SIMUTA-B TSPs as the baseline for development.

At times, the decision to use SIMUTA-B as the foundation complicated the development process due, in large extent, to fundamental differences between the SIMUTA-B and SIMUTA-D program objectives. At the most obvious level, reliance on the SIMUTA-B program for providing SIMUTA-D developers with TSPs ready for conversion became a problem when SIMUTA-B delivery dates slipped and the SIMUTA-B TSPs simply were not available during the planned time frames. While both development teams made every effort to get their jobs done and provide support where possible, the opposing timelines for the two efforts frequently resulted in simultaneous development efforts between SIMUTA-B and SIMUTA-D. From a development standpoint, there were advantages to the two teams working together. For instance, the SIMUTA-D team was able to ensure that aspects of the SIMUTA-B TSPs would indeed

support a digital conversion and their input added an extra level of refinement to the SIMUTA-B TSPs. However, from a requirements standpoint, simultaneous development meant that the SIMUTA-D team had less time to devote solely to SIMUTA-D TSP development than originally planned. Other lessons learned that relate to SIMUTA-D's development efforts appear below.

Execution focus. The planning and preparation phases of training are not a component of any SIMUTA training program, including SIMUTA-B. Thus, the need to focus training on the execution phase of each mission was inherent in the requirement to use the SIMUTA TF TSPs to support SIMUTA-D development. The mission execution focus complements the strategic goals of VTP training: to maximize the time available to conduct structured training in a simulation environment. However, this approach was not well accepted by TF 2-33 Armor. Resistance to this training approach is not unique to SIMUTA-D; however, it may have been exacerbated by the fact that many of the opportunities to use the digital devices are realized during the plan, preparation, consolidation, and reorganization phases of the mission. To use the digital devices only during execution of the training missions did not allow the unit to experience the full range of capabilities afforded by each of the devices, especially since the TF SOP called for voice only communication once enemy contact had been made. While the FE data indicate that training constrained to the execution phase did not adequately address TF 2-33 Armor's training needs, it is important to remember that these data reflect the comments of only one group of participants. It is indeed possible that other groups may react much differently.

TTPs for the digitized battlefield. The TTPs used for SIMUTA-B support conventional battalion level maneuver forces, taken from standard Army doctrinal MTP and ARTEP sources (e.g., Department of the Army, 1988). SIMUTA-D required TTPs for the digitized BN/TF and they are still evolving. SIMUTA-D began its effort to incorporate TTPs for the digitized battlefield using doctrinal sources such as ST 71-2-2 (Department of the Army, 1995d) and FKSM 71-2 (Department of the Army, 1995c). However, their experience with Focused Dispatch led TF 2-33 Armor to develop an SOP for digital applications that extended beyond the current published literature. Therefore, TF 2-33 Armor's digital SOPs (both written and emerging) were included in the SIMUTA-D TSPs as appropriate. New TTPs for the digitized TF also called for SIMUTA-D to conform to new CP configurations and to review the impact of digitization on the requirements of each position being role played by a TF 2-33 Armor member. Attempting to fit these requirements to a conventional training structure may not have been the best approach to developing the SIMUTA-D TSPs.

Implementation

The discussion below refers to lessons learned gathered from conduct of the Level 3 and Level 4 trials. Unfortunately, strict adherence to the model specified in Table 7 was not possible. The overarching lessons learned in regard to implementation relate to the importance of the digital devices being available as planned and the requirement to have digitally proficient O/Cs. As reflected throughout this report, O/Cs play a crucial role in the successful implementation of a structured training program. Brown (1992) maintains that trained O/Cs are a must for BN/TF simulation training and that part of their training should include detailed introduction to virtual and constructive simulation. This training familiarizes the O/Cs with the limitations of various

simulations and prepares them to compensate, particularly in the AARs. The importance of trained O/Cs is such that Brown calls for O/C validation. For SIMUTA-D, functional proficiency of O/Cs should extend to the digital devices and new TTPs associated with the training effort. A major lesson learned is that the successful conduct of structured training programs such as SIMUTA-D relies on the O/Cs receiving the necessary training to develop these key proficiencies. Other factors which influenced the implementation of the SIMUTA-D exercises, with suggestions for improvements, appear below.

Digital devices. Digital device reliability is critical to the success of any training effort, not only SIMUTA-D. The digital devices must work before a unit will accept that the training program satisfies their training requirements for the digitized battlefield. Reliability problems with training efforts requiring the use of new digital devices will continue for some time. Being no exception, device reliability affected the outcome of SIMUTA-D. Recommendations for increasing the probability of successful device set-up appear below.

The probability of increasing the reliability of digital devices occurs when functional testing is planned and budgeted. (An example of a functional test conducted in SIMNET, is provided by Heiden, Sever, Smith, & Throne, 1996.) Thorough functional testing requires all equipment on-site, installed, and tested at least several days prior to the first scheduled training mission. This allows time for troubleshooting should equipment problems arise and prevents the unit from losing valuable training time, or worse yet, conducting training exercises in a degraded digital environment. During the training, on-site support of the digital equipment is essential to meeting the training objectives. Developing a set of criteria that set a threshold for operational equipment requirements is also important. A set of criteria was developed for SIMUTA-D. The criteria contained specifications for the minimum number of digital devices required to credibly conduct trials. These criteria proved useful in determining the point at which the number of operational digital devices threatened to downgrade the exercise from digital to conventional.

Another concern related to the digital devices and training is swivel chair integration. Swivel chair integration requires an operator to transfer situational awareness information from the Janus screen to IVIS or another digital device. An actual, automated, link between the simulation and the digital devices would reduce workload and provide much more realistic training.

Rehearsals. For SIMUTA-D, orders briefing is a pre-exercise preparation activity. Any rehearsal time available on-site should be utilized to practice C3 procedures with the digital devices. TF 2-33 Armor used part of its rehearsal time to brief the OPORD and to back brief the TF Commander, planning activities which were not part of the SIMUTA-D training objectives. One important outcome of the SIMUTA-D Level 3 and Level 4 trials was the development of a well-accepted method to conducting digital rehearsals for the unit. Several methods were tried but the preferred method was to conduct a digital rehearsal of the mission using Janus-A and each of the digital devices. This method featured the S2 controlling the OPFOR and allowed the unit to employ fire power (see Table 10). A primary advantage of this method was that the unit rehearsed using the digital devices under tactical conditions. This should be a highly effective method for units proficient on the digital devices. Those who are not, may require a separate,

technical rehearsal prior to rehearsing tactics. As stated earlier, the SIMUTA-D TSPs are based on the premise that rehearsals of combat fundamentals are not necessary for the training audience.

Another lesson learned is that it is important that O/Cs conduct their own rehearsals and participate as trainers in the unit's rehearsals. The O/C rehearsal is an important step in participating in the unit's rehearsals and in developing a clear picture of the significant events associated with each mission. Related, the unit's rehearsal is the first real training event for the unit and the O/Cs should use it as an opportunity to establish their role as trainers and to provide TTP guidance on the use of the digital devices. While O/C participation in rehearsals has been an issue with at least one other VTP program (i.e., SIMBART), it is quite likely that a lack of proficiency with the digital devices used during SIMUTA-D contributed to the O/Cs not conducting or participating in rehearsals. Thus, this is another example of why digital device proficiency for O/Cs is critical.

Missions. Disagreements regarding the interpretation of doctrine and selected tactics are unavoidable, especially when the doctrine is new and evolving. Still, it is important that the training units have confidence in the order that they are executing. Part of that confidence is gained when the unit believes that the exercise is sound and accepts its structured nature. Much of the feedback from SIMUTA-D pointed to OPORD improvements, especially for the DATK and DIS missions. Significant payoffs may have been gained had there been provisions for more thorough piloting of the DIS and DATK SIMUTA-D missions before the FE was conducted. It follows that the most accepted mission was the MTC which had undergone the most extensive validation efforts prior to its hand-off to SIMUTA-D.

Mission lessons learned also apply to the conduct of the OPFOR. To maintain structured training, it is imperative that the OPFOR paint a realistic picture of tactics and capabilities within adequate constraints. This ensures achievement of the training objectives. The OPFOR mission must provide situations to the training unit that cause the staff to collect, interpret, and disseminate information, and provide recommendations to the Commander. The OPFOR mission is not to win. The SIMUTA-D TSPs provide a structured OPFOR role. Constraints on OPFOR play ensure adequate play length and inclusion of all the staff in the training exercise.

Staffing. Staffing in the command and control vehicle (C2V) CPs followed ST 71-2-2 (Department of the Army, 1995d) and the unit's experience for Focused Dispatch. The Janus CPs did not replicate the C2V. Also the Janus CP did not replicate the communication setup in the C2V that allows more direct sharing of information. Additional personnel in the Janus CP could compensate for this difference. However, increasing the staffing to accommodate the simulation environment does not accurately reflect the digital environment and induces anomalies in the training.

AARs. Standardization of the AAR format is required. Standardization reinforces lessons learned and helps to sustain training. AAR presentations which vary from exercise to exercise, leave the training audience confused about what they were doing well and what they were doing poorly. The AARs should focus on the agreed-upon training objectives of the

program, with the format centering around the seven BOSs. What needs to be sustained and what needs to be trained should be recorded for each BOS, followed by a summation of the existing trend established by the unit (e.g., the unit is sustaining fire planning operations or the unit needs improvement in countermobility planning). Further, AARs for digitized battlefield operations should not limit feedback to conventional tactics. There should be a real focus on the TTPs used during the mission to support operations on the digitized battlefield. Discussion items should address ways that decision making, information use, and staff interaction influenced the conduct and outcome of the battle. This rarely happened during SIMUTA-D. Two potential explanations for this seem plausible. First, the O/Cs were less proficient on the digital devices than the unit they were training. Perhaps if the O/Cs had been more familiar with the devices, the presentation of AARs would have been more straightforward. As it was, the O/Cs showed the tendency to rely on what they knew best: executing the missions using conventional TTPs. Second, the O/Cs reported that they did not have the automated data collection capabilities or visual monitoring opportunities needed to provide feedback on use of the digital devices. They frequently stated the need to automatically capture digital message transmissions for each device and to have improved opportunities for visually monitoring performance. Still, digital device information did not get incorporated into the AARs even after the SIMUTA-D team provided the O/Cs with a log of much of the digital message traffic.

Related, the observation forms are an important part of the AAR process for SIMUTA-D. Ultimately, these forms are to be used to assist the O/Cs in delivering AARs and developing THPs focused on tactical use of the digital devices. As the FE data indicate, the primary focus of the AARs as conducted by the O/Cs was conventional operations. Minimal use of the forms resulted in missed opportunities for the O/Cs to capture important data related to tactical use of the digital devices and no THPs were constructed. The O/C team was asked to use the observation forms in the Introductory Briefing and also when it was observed that the forms were not being used in the manner intended. The O/C who did use the observation forms had suggestions for improvements, but overall regarded them as an important tool for data collection. It is important to note that all suggestions for improvements to the forms were considered; however, the most useful suggestions came from the O/C who actually used the form. Thus, there are several reasons why it is important that the O/Cs use the data collection materials provided in the TSPs. Suggestions for achieving greater compliance with this portion of the TSP are needed. SIMUTA-D coordinated early drafts of the observation forms with the O/Cs, but perhaps more of a collaborative development effort which includes agreement and instruction on use of the forms would lead to an improvement.

Training Versus Research Focus

At a higher level, a lesson learned relates to implementing SIMUTA-D as a training program early in the development process. The SIMUTA-D was a research effort tasked with conducting a FE of newly developed TSPs, based on evolving doctrine. It is common to refer to a crawl-walk-run approach to soldier training, but the same concept applies to training development. That is, any new training program requires thorough evaluation using valid research methodologies before it is trialed with a unit that expects a real training benefit. SIMUTA-D was not developed under these conditions for several reasons.

First, a compressed development time frame (approximately 7 months) prevented a truly iterative development process and the use of accepted research methodologies. For instance, there was no allowance for any sort of control group in the methodology. While not a requirement under the current contract, the lack of a control group may have limited conclusions directed at how well the TSPs supported digital training requirements. Future developers should consider the impact of this limitation on their data collection efforts. In addition, there was only one Level 4 trial for each mission. This limited sample size meant that all changes to the TSPs following the FE were based on the feedback of one unit. Several times, FE observers noted participants calling for changes to the orders which contradicted their own earlier comments. Thus, data based on this small sample had to be considered very carefully before changes to the TSPs were implemented.

Second, the SIMUTA training model calls for the use of the O/C team as the personnel who implement the training program at its onset. This model was troublesome for SIMUTA-D since it called for innovations in training that created new requirements for the O/C team. New tactics and technologies must be mastered before effective training techniques for Force XXI will be realized. Thus, the changes brought about by digitization of the battlefield create new training requirements for the soldiers to be trained and the trainers. The O/C teams need adequate opportunities to undergo the appropriate training. Ideally, a program such as SIMUTA-D would feature a train-the-trainer program, characterized by a progressive transition from development trainers to O/C trainers. The O/Cs would begin their roles as trainees, receiving hands-on training on digital techniques for rehearsals, device operation, data collection, TTPs, and AARs. Once the O/Cs were proficient in each of these areas, they would assume the role of trainer. This approach has two advantages. First, the O/Cs would be fully qualified on the digital devices and comfortable with addressing digitization in their training. Second, the progressive nature of this approach would give the O/Cs many opportunities to exercise the TSPs. More opportunities to exercise the TSPs might lead to increased compliance with the training methodologies outlined in the TSPs and more reliable use of the training support materials (e.g., O/C Observation Forms).

Third, a training program in its early development stages should maintain full implementation of the training package as its primary objective. Task Force 2-33 Armor was unique in possessing the digital device and TTP familiarity needed to support SIMUTA-D's implementation efforts. Ideally, selected participants should participate in the training exercise without feeling that they have the obligation or authority to fix things in midstream. Moreover, to ensure that participants do adhere to the above requirements, the development team should have the lead for managing the initial implementation of a new training program. This lead role would not necessarily diminish input from the TF Commander or Senior O/C but it would clearly define the role of the development team during early trial executions.

Program Extensions

Expand/Upgrade Digital Environments

The SIMUTA-D team sought a method to collect and process digital data (message traffic) for use during the AARs. This would have allowed the O/Cs to place more emphasis on how the unit used the digital devices during their training. The SIMUTA-D team members questioned technical experts in SIMNET on techniques to capture and turnaround digital data for AARs. For instance, VS I data collection included video data recordings of B2C2, IVIS and IFSAS screens for analysis and AARs. Ideally, some of the data collection, especially digital message traffic, would be automated. However, automatically capturing and processing digital message traffic data in SIMNET takes considerable computer resources and time. Turnaround time is over one hour and is not acceptable for the AAR timeline. In Janus, there is no mechanism for automatically recording the digital message traffic. Video recording of screens did not take place in SIMUTA-D since the value of such recordings was questionable, given the effort and time required to locate significant events during a video playback.

A system is needed to record digital traffic and provide the capability to play back voice message traffic and provide processed data on digital message traffic. In SIMNET, a data collection system exists which records the actual exercise with any voice comments made by an O/C. However, voice data collection capabilities in SIMNET are also limited in terms of processing time, requiring manual transcription of all voice traffic. As mentioned above, a data collection and analysis system capable of collecting digital device data also exists in SIMNET. However, components of the devices require instrumentation and definition of performance measures so that the data collection system can capture and reduce the desired data. Limitations of this system include report turnaround time and the complexity of the data that is generated. Thus, the ideal data collection systems for SIMNET and Janus would process digital messages (within minutes of the end of the exercise) into user friendly reports that support O/C built AARs and THPs.

Another possible extension of SIMUTA-D is a training exercise using actual C2Vs for tactical operation centers. Use of actual CP vehicles would increase the realism of the exercises. This extension includes a live simulation exercise using the SIMUTA-D TSPs, similar to the approach used during Focused Dispatch. Featuring C2Vs in an actual training area with one live company, other virtual forces would be run from the SIMNET or Janus facilities at Fort Knox. A technical challenge involved with linking the C2Vs to SIMNET or Janus involves matching the databases; though, this linkage was achieved during Focused Dispatch. A potential obstacle to this approach is the lack of room in the C2Vs for O/Cs to conduct their observations.

Expand Training Concept

Develop a formal train-the-trainers program. Critical to the success of a program such as SIMUTA-D is that the trainers have a high level of expertise on the digital equipment being trained and that they are knowledgeable of newly developed TTPs for the digitized battlefield. Trainers should also demonstrate prior to implementation that they understand and agree to

comply with the critical aspects of a particular training program. Thus, an effective training program ensures that its trainers are proficient at digital device operation, knowledgeable of TTPs for the digitized battlefield, and able to make use of the TSPs before conducting any unit training. While O/Cs received formal instruction under the SIMUTA program on all aspects of the TSPs, it was generally expected that once the initial training program was conducted (during the original SIMUTA effort) that the O/C team was responsible for its own sustainment training. For instance, O/C training for SIMUTA-B consisted mostly of briefings which highlighted changes made to the TSPs since their last implementation. What is needed is a formal training program for any O/C team that is flexible enough to be tailored to a range of battlefield C3 technologies. This will help ensure that the trainers do their job satisfactorily and that the training program is followed. Such a training program would benefit both intact O/C teams preparing to support a new program with new requirements and O/C teams undergoing significant personnel changes. The O/C team that supported SIMUTA-D fits both of these descriptions. Therefore, it is recommended that future development efforts call for formal O/C training.

Include additional mission phases. The SIMUTA program focuses on the execution phase of training. This focus uses the premise that exercises limited to execution allow the unit to maximize their simulation time by training a set of high priority tasks. During the SIMUTA-D trials, the TF expressed the desire to plan and prepare the missions. Since the digital devices play a role in phases other than execution (i.e., plan, prepare, consolidate, and reorganize), this suggestion warrants consideration; though, the first two options offered below pose challenges to maintaining a structured training environment. The first option for additional mission phases provides the training unit a brigade order used to prepare their own battalion order at the unit. The unit sends their battalion order to the O/C team or contractor for construction of the simulation exercise. Compared to SIMUTA-D, this option requires more O/C or contractor resources to input the scenario into either Janus or SIMNET before the unit's scheduled training and to update/ensure that key training events and objectives central to structured training and the TSPs are met.

The second option allows the unit time at the simulation site to develop the scenario after receiving the brigade order. Compared to building the scenario files prior to the unit's arrival, this alternative potentially wastes simulation site resources while the unit plans and prepares the mission and requires even more O/C or contractor support to accomplish the task in less time.

A third option is for the unit to pick from several courses of action (COA) already developed and resident on the simulation systems. After selecting a COA, the O/Cs simply execute that option on the system. The selected COA is either accompanied by the appropriate OPORD or the unit uses the selected COA to build their own OPORD. The first potential advantage to this approach is that the COAs provide more specific parameters for the unit to use in developing their OPORD, helping to preserve the structured nature of the training program. Second, using a COA to guide the unit's planning and preparation activities is faster than having the unit begin their development efforts with a brigade order.

Extend training to other echelons. Other potential extensions involve extending SIMUTA-D training to lower and higher echelons. For instance, SIMUTA-D exercises could be developed for company and platoon size units. Using the current brigade and TF orders, SIMNET company and platoon exercises would naturally fit within the overall scheme of maneuvers that already exist. Company level leaders train on Janus exercises world-wide. The development of company level SIMUTA-D Janus exercises would give the same training opportunity to a digitized company size unit. Currently, company level SIMNET exercises require more simulators than are currently available at Fort Knox. With the current simulator configuration at Fort Knox, a company operates simulators to platoon leader level and uses additional virtual platoon vehicles to fill out the company. The O/Cs control the virtual (tethered) vehicles from O/C workstations. Platoon level SIMNET exercise requirements do not exceed the current number of simulators at Fort Knox.

Moving to a higher echelon, Janus is the best available alternative for brigade level training. Since SIMUTA-D provides prototype TSPs for the digitized battlefield that (with some revision as shown in Table 4 and explained in the Introduction of this report) meet the guidelines in TRADOC Regulation 350-70 (U. S. Army TRADOC, 1996), basing the brigade exercises on SIMUTA-D and SIMBART is now a more straightforward matter. The digital device set up for brigade level exercises would be similar to the SIMUTA-D BN/TF configuration. Brigade level SIMNET exercises are not feasible with the current number of simulators at any simulation site. A combined Janus/SIMNET brigade exercise would require the use of linking technology between SIMNET and Janus. Another possibility involves exploring the feasibility of linking Brigade/Battalion Battle Simulation (Department of the Army, 1995b) to SIMNET and converting the COBRAS brigade level training packages for digital application. (For a description of the COBRAS effort, see The COBRAS Team, 1995.)

Conclusions

A number of factors will influence future doctrine, among them information technologies such as C3 systems (U.S. Army TRADOC, 1994). Simulations and experiments through battle laboratories continue to assist in identifying the requirements associated with the new doctrine. New technologies that drive these doctrinal changes will affect soldier training requirements immensely. Competency on a wide variety of tasks and the ability to successfully operate new equipment are emerging soldier training requirements. Certainly, there is no doubt that quality trained soldiers are key to the success of Force XXI.

The SIMUTA-D effort is a first step in providing structured training to a BN/TF staff preparing to operate on a digitized battlefield. This report describes the foundation of SIMUTA-D, the TSP development methods, the major findings from the FE, the lessons learned, and possible ways to extend the program. This chapter summarizes key points from the entire report. Table 12 links summarized suggestions for program improvements and extensions to each phase of the SIMUTA-D effort.

Table 12

Major Conclusions for SIMUTA-D

PHASE	MAJOR CONCLUSIONS
Design	Consider the inclusion of additional phases of operation such as plan, prepare, consolidation, and reorganization. Schedule units and facilities for all levels of evaluation as early as possible. Consider the limitations associated with evolving TTPs for the digital battlefield and the inclusion of only collective tasks in identifying new digital tasks.
Develop	Include formal train-the-trainer programs. Plan development of new orders to coincide with the completion of baseline orders. Provide adequate time on simulations and digital devices for development, training, and trials. Consider the need for a digital message data collection system for AARs.
Implement	Make digital device set-up and maintenance a priority. Use the crawl-walk-run approach to implementing new training programs. Conduct a complete formative evaluation.
Extend	Build exercises for additional echelons. Build joint SIMNET/Janus brigade exercises.

Train the Trainers and Give Them the Necessary Tools

O/Cs need digital tools to conduct AARs that address the tactical use of digital devices. However, greater digital awareness would allow the O/Cs to conduct such AARs without additional equipment. How the unit handles the challenges of digitization, how they work together to meet the challenges, and how the AARs contribute to training for the digitized battlefield should be addressed by the O/Cs. Thus, not only do trainers need data collection tools that capture the appropriate training data needed for unit feedback, they also need digital device

and TTP training that allow them to interpret information in ways that maximize the unit's training experience.

Digitization Changes Task Procedures More Than it Creates New Collective Tasks

The SIMUTA-D team reviewed documents such as FKSM 71-2 (Department of the Army, 1995c) and the Armor School's M1A2 task list (R. B. Armstrong, personal communication, August 7, 1995) to ascertain whether additional digital tasks for BN/TFs had been identified in doctrinal sources. After the FEA, it was determined that no new collective tasks or subtasks relevant to SIMUTA-D existed. (SIMUTA-D followed the SIMUTA model of focusing on collective tasks and subtasks and this may have limited the identification of digital tasks.) However, it was clear from the FEA interviews that the ways in which some tasks are accomplished would change.

One of the biggest obstacles faced by SIMUTA-D was the evolving nature of the TTPs for the digitized BN/TF. As described earlier, SIMUTA-D began its effort to incorporate TTPs for the battlefield by using doctrinal sources such as FKSM 71-2 and ST 71-2-2 (Department of the Army, 1995c, 1995d). However, it became apparent that the unit participants from TF 2-33 Armor had developed new digital SOPs that extended beyond the current published literature. These new digital SOPs were included in the SIMUTA-D TSPs as appropriate. In response to the emerging TTPs, additions were made to the O/C Observation Forms to show changes in tasks associated with the digital devices. These additions were boldfaced to highlight that they were added to compensate for digitization of the tasks. The O/Cs were informed that the additions were not approved by TRADOC. Changes were also driven by new TTPs for the digitized BN/TF that called for SIMUTA-D to conform to unconventional CP configurations and to review the impact of digitization on each position being role played during the training exercise.

The Evaluation Process Pays Off and Should be Expanded

The evaluation process resulted in digital payoffs for SIMUTA-D, including the identification of training methodologies that support tactical use of digital devices on the battlefield. For instance, a method for conducting rehearsals was refined over the course of the implementation trials. Requirements for AARs and the collection of digital message traffic data were also specified. Expansion of the evaluation process is recommended, but determining to what extent new training programs should be piloted and formatively evaluated before the costs outweigh the benefits is a complex matter. The time and resources available to SIMUTA-D for evaluating the TSPs were limited, affecting the generalizability of the data. In particular, future developers should consider factors such as government agency coordination requirements, digital device and simulation facility availability, assumptions regarding participant qualifications, and experimental design trade-offs early in the design process.

References

Ainslie, F. M., Leibrecht, B. C., & Atwood, N. K. (1991). Combat Vehicle Command and Control Systems: III. Simulation-based company evaluation of the soldier-machine interface (SMI) (ARI Technical Report 944). Alexandria, VA: U S. Army Research Institute for the Behavioral and Social Sciences. (AD A246 237)

Alluisi, E. A. (1991). The development of technology for collective training: SIMNET, a case history. Human Factors, 33, 343-362.

Army Research Institute (1995). Training support packages for application on the digital battlefield (Statement of Work). Fort Knox, KY: U.S. Army Research Institute for the Behavioral and Social Sciences.

Atwood, N. K., Winsch, B. J., Sawyer, A. R., Ford, L. A., and Quinkert, K. A. (1994). Training and soldier-machine interface for the Combat Vehicle Command and Control System (ARI Technical Report 1007). Alexandria, VA: U S. Army Research Institute for the Behavioral and Social Sciences. (AD A285 677)

Barber, T. X. (1976). Pitfalls in human research. New York: Pergamon Press Inc.

BDM Federal, Inc. (1995a). Simulation-Based Mounted Brigade Training Program (SIMBART): research program plan. Fort Knox, KY: Author.

BDM Federal, Inc. (1995b). Simulation-Based Multiechelon Training Program for Armor Units-Digital (SIMUTA-D) research plan. Fort Knox, KY: Author.

Borders, K. S. and Abbott, B. B. (1988). Research design and methods: A process approach. Plantation View CA: Mayfield Publishing Company.

Brown, F. J. (1992). Battle command staff training. (IDA Paper P-2785). Alexandria, VA: Institute for Defense Analysis.

Burnside, B.L. (1990). Assessing the capabilities of training simulations: A method and Simulation Networking (SIMNET) application (ARI Research Report 1565). Alexandria, VA: Army Research Institute for the Behavioral and Social Sciences. (AD A226 354)

Campbell, C. H., Campbell, R. C., Sanders, J. J., Flynn, M. R., & Myers, W. E. (1995). Methodology for the development of structured simulation-based training (ARI Research Product 95-08). Alexandria, VA: U.S. Army Research Institute for the Behavioral and Social Sciences. (AD A296 171)

Department of Defense (1995). Department of defense modeling and simulation master plan. Washington, D.C: Author.

Department of the Army (1988). Mission training plan for the tank and mechanized infantry battalion task force, ARTEP 71-2-MTP. Washington, D. C: Author.

Department of the Army (1994). Advanced Warfighting Experiment Operation Desert Hammer VI final report. Fort Knox, KY: U.S. Army Armor Center Mounted Warfighting Battlespace Lab.

Department of the Army (1995a). Advanced Warfighting Experiment - Focused Dispatch Battle Lab experiment plan (BLEP). Fort Knox, KY: Mounted Battlespace Battle Lab.

Department of the Army (1995b). Brigade/Battalion Battle Simulation: Commander's planning guide. Ft. Leavenworth, KS: National Simulation Center.

Department of the Army (1995c). Mission training plan for the M1A2 tank and mechanized infantry battalion task force (FKSM 71-2-MTP (M1A2)). Fort Knox, KY: U.S. Army Armor School.

Department of the Army (1995d). Tactics and techniques for the digitized battalion task force (ST 71-2-2) (U.S. Armor School Special Text 71-2-2 Revised Draft). Fort Knox, KY: U.S. Army Armor Center.

Department of the Army (1995e). Tactics, techniques, and procedures for the digitized brigade (ST 71-3). Fort Knox, KY: U.S. Army Armor Center.

Department of the Army (1995f). Tactics, techniques, and procedures for the digitized company (ST 71-1-1) (U.S. Armor School Special Text 71-1-1 Revised Draft). Fort Knox, KY: U.S. Army Armor Center.

Hartzog, W. H. (1995, May). Crossing the threshold into a new age. Army, 21- 28.

Heiden, C. K., Sever, B., Smith, P. G., & Throne, T. Functional test example for distributed interactive simulation (ARI Research Note). Manuscript in preparation. Alexandria, VA: U. S. Army Research Institute for the Behavioral and Social Sciences.

Hoffman, R. G., Graves, C. R., Koger, M. E., Flynn, M. R., & Sever, R. S. (1995). Developing the RCVTP: History and lessons learned (ARI Research Report 1675). Alexandria, VA: U.S. Army Research Institute for the Behavioral and Social Sciences. (AD A296 153)

Naylor, S. D. (1994, November). Making the leap. Army Times, Special Report, 14-16.

Reimer, D. J. (1995, October). Where we've been...Where we're headed: Maintaining a solid framework while building the future. Army, 21-26.

Saffi, M. R. (1991). SIMNET-automated forces: The combined arms workstation user's guide (Report No. 7025). Cambridge, MA: BBN Systems and Technologies Corporation.

The COBRAS Team (1995). Force XXI Training Program: Development of virtual and constructive simulation-based training for the conventional mounted brigade research plan (HumRRO Interim Report I-PRD-95-13). Alexandria, VA: Human Resources Research Organization.

Turecek, J. L., Campbell, C. H., Myers, W. E., Garth, T. H. (1995). Reserve Component Virtual Training Program (RCVTP) orientation guide (ARI Research Product 95-07). Alexandria, VA: U.S. Army Research Institute for the Behavioral and Social Sciences. (AD A292 885)

U.S. Army Armor School (1989). SIMNET user's guide. Fort Knox, KY: Headquarters. Author.

U.S. Army Digitization Office (1995). Digitizing the battlefield smartbook [On-line]. Available: http://www.ado.army.mil/smrt book/sbindexhtm. Author.

U. S. Army TRADOC (1993). Alternate format for preparing and publishing United States Army Training and Doctrine Command administrative publication. TRADOC Regulation 25-34. Fort Monroe, VA: Headquarters. Author.

U.S. Army TRADOC (1994). Force XXI operations: A concept for the evolution of full-dimensional operations for the strategic Army of the early twenty-first century. TRADOC Pamphlet 525-5. Fort Monroe, VA: Headquarters. Author.

U.S. Army TRADOC (1995a, March). Joint venture campaign plan (Coordination draft). Fort Monroe, VA: Headquarters. Author.

U.S. Army TRADOC (1995b, May). Battle labs...Defining the future. U.S. Army TRADOC Director for Battle Lab Integration, Technology, and Concepts. Fort Monroe, VA: Headquarters. Author.

U.S. Army TRADOC (1996). Training support package (TSP) development for collective and new equipment training (Chapter V-7). TRADOC Regulation 350-70. Fort Monroe, VA: Headquarters. Author.

APPENDIX A
Acronyms

AAR	After Action Review
ADO	Army Digitization Office
A/L	Administration and Logistics
ARI	Army Research Institute
ARTEP	Army Training and Evaluation Program
ARTEP-MTP	Army Training and Evaluation Program-Mission Training Plan
ASAS	All Source Analysis System
AWE	Advanced Warfighting Experiment
B2C2	Brigade and Battalion Command and Control
BN/TF	Battalion Task Force
BOS	Battlefield Operating System
C2	Command and Control
C2V	Command and Control Vehicle
C3	Command, Control, and Communication
COA	Course(s) of Action
COBRAS	Combined Arms Operations at Brigade Level Realistically Achieved through Simulation
CONWOR	Controller Workstation
COR	Contracting Officer's Representative
CP	Command Post
CRP	Combat Reconnaissance Patrol
CSS	Combat Service Support
CTCP	Combat Trains Command Post
CVCC	Combat Vehicle Command and Control
DARPA	Defense Advanced Research Projects Agency
DATK	Deliberate Attack
DIS	Defense in Sector
DST	Decision Support Template
DTLOMS	Doctrine, Training, Leaders, Organizations, Materiel, and Soldier Systems
EXFOR	Experimental Force
FD	Fire Direction
FE	Formative Evaluation
FEA	Front-End Analysis
FED	Forward Entry Device
FKSM	Fort Knox Supplemental Manual
FM	Field Manual
FRAGO	Fragmentary Order
FS	Fire Support
FSO	Fire Support Officer
HACC	Higher Headquarters and Adjacent Unit Control Cell
IFSAS	Improved Fire Support Automated System
INTSUM	Intelligence Summary

IP	Internet Protocol
IVIS	Intervehicular Information System
Janus-A	Janus Army
LAN	Local Area Network
LCU	Lightweight Computer Unit
MBBL	Mounted Battlespace Battle Lab
METT-T	Mission, Enemy, Terrain, Troops, and Time available
MTC	Movement to Contact
MTP	Mission Training Plan
NBC	Nuclear, Biological, and Chemical
NCO	Non-Commissioned Officer
NCS	Net Control Station
NTC	National Training Center
O&I	Operations and Intelligence
O/C	Observer/Controller
O/C/I	Observer/Controller/Interactor
OIC	Officer in Charge
OPFOR	Opposing Forces
OPORD	Operations Order
POC	Point of Contact
PSNCO	Personnel Services Non-Commissioned Officer
R&S	Reconnaissance and Surveillance
RCVTP	Reserve Component Virtual Training Program
SIMBART	Simulation-Based Mounted Brigade Training
SIMNET	Simulation Networking
SIMUTA	Simulation-Based Multiechelon Training Program for Armor Units
SIMUTA-B	Simulation-Based Multiechelon Training Program for Armor Units - Battalion Exercise Expansion
SIMUTA-D	Simulation-Based Multiechelon Training Program for Armor Units - Digital
SINCGARS	Single Channel Ground-Airborne Radio System
SITEMP	Situational Template
SME	Subject Matter Expert
SO	Signal Officer
SOP	Standing Operating Procedures
SOW	Statement of Work
ST	Special Text
STRICOM	Simulation, Training, and Instrumentation Command
TCIM	Tactical Communications Interface Module
TF	Task Force
THP	Take Home Package
TOC	Tactical Operations Center
TRADOC	Training and Doctrine Command
TSP	Training Support Package
TTP	Tactics, Techniques, and Procedures
UAV	Unmanned Aerial Vehicle

VS I	Virtual Simulation I
VTP	Virtual Training Program
XO	Executive Officer

Appendix B
The SIMUTA-D Device Network[1]

The SIMUTA-D experiment utilized a simulated task force with a Brigade TOC for control. The task force was configured by the following cells:

HACC/BRIGADE
TF Main CP - Operations and Intelligence TOC
CTCP
TF Main CP - FS
TF Commander
TF S3
Scout Platoon
FS
CSS
Company/Team A
Company/Team B
Team C
Company D

To digitally interconnect the TF and the Brigade, the following C3 software was used: B2C2, IVIS, IFSAS, and ASAS.

Through analysis of software capability and functionality, the following nets were developed to ensure digital interconnectivity: B2C2 Brigade Command Net, B2C2 Brigade A/L Net, B2C2 TF A/L Net, IVIS TF Command Net, FED TF Fire Support (FS) Net, and IFSAS FS Net.

Continued on next page

[1] The materials contained in this Appendix were contributed in large part by CPT Michael Spragg of the Mounted Battlespace Battle Lab.

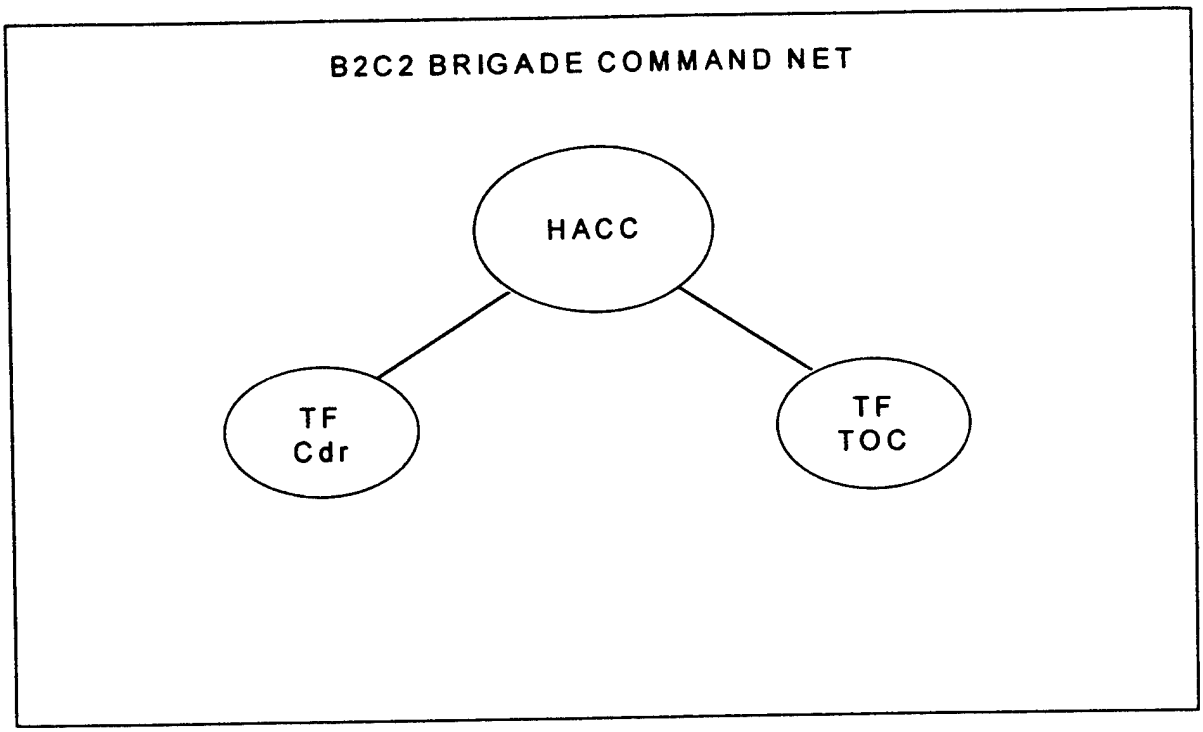
B2C2 BRIGADE COMMAND NET
HACC
TF
Cdr
TF
TOC

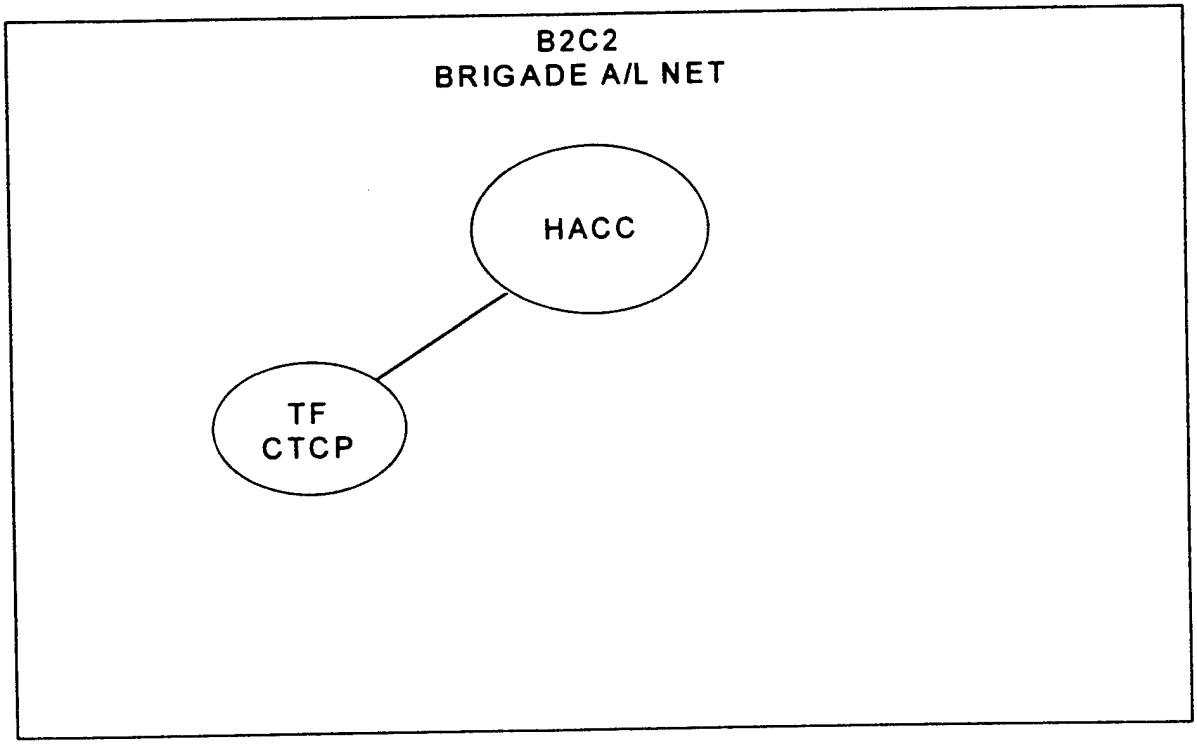
B2C2
BRIGADE A/L NET
HACC
TF
CTCP

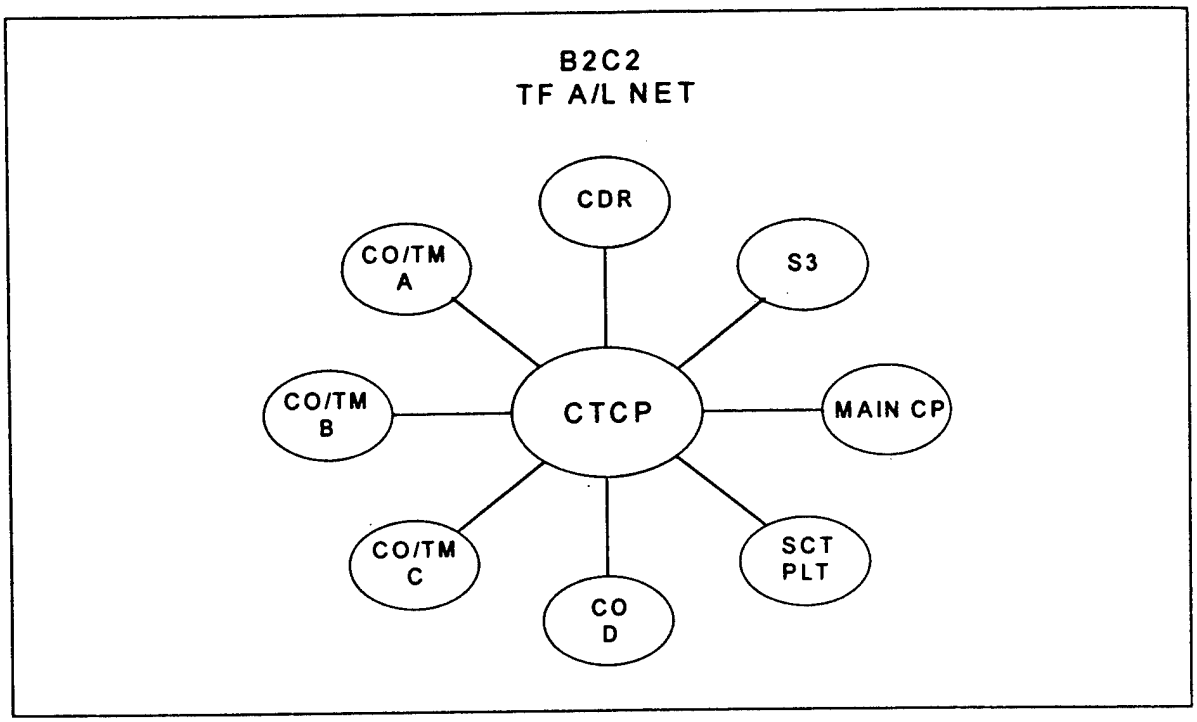
B2C2
TF A/L NET
CDR
CO/TM A
S3
CO/TM B
CTCP
MAIN CP
CO/TM C
SCT PLT
CO D

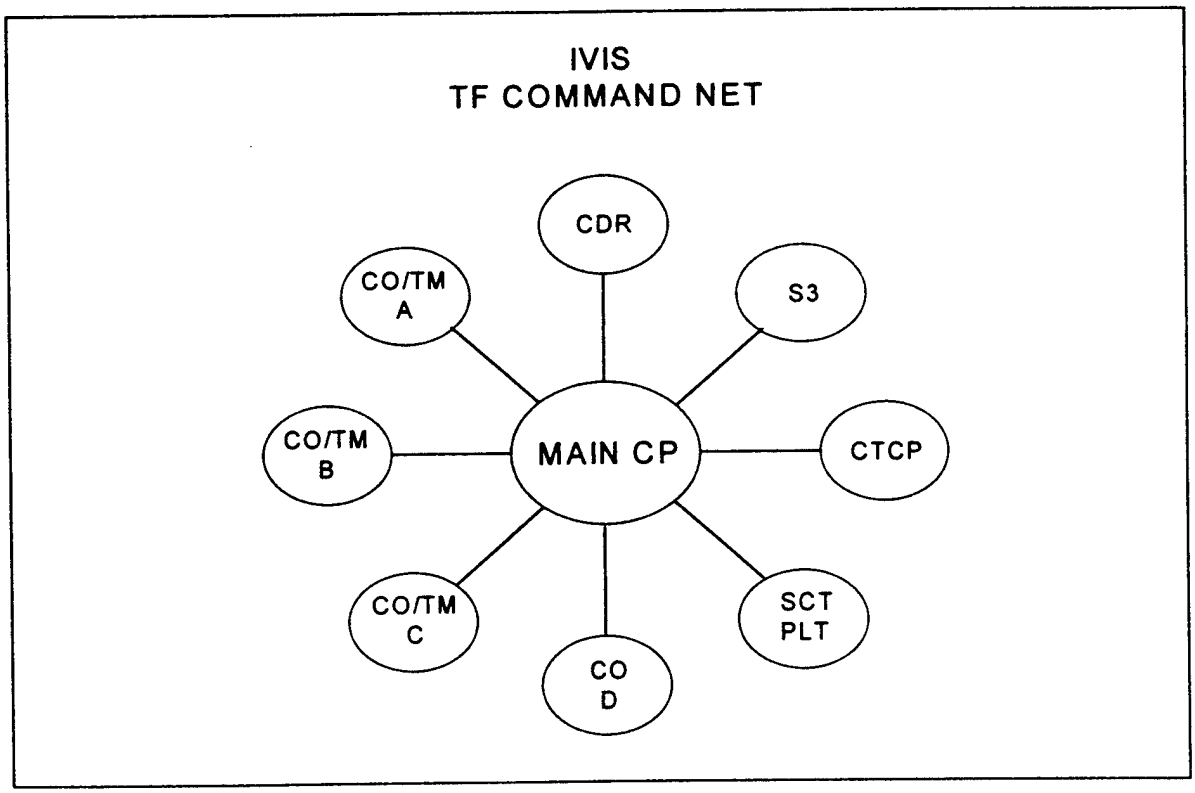
IVIS
TF COMMAND NET
CDR
CO/TM A
S3
CO/TM B
MAIN CP
CTCP
CO/TM C
SCT PLT
CO D

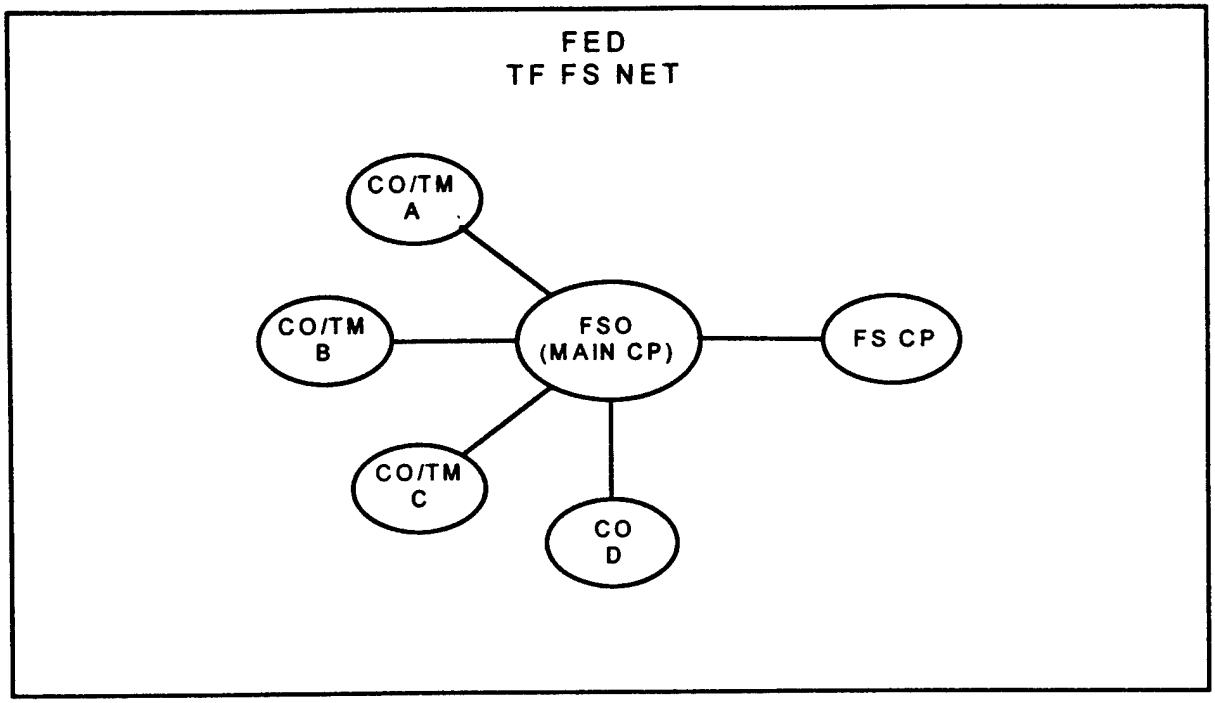
FED
TF FS NET
CO/TM
A
CO/TM
B
FSO
(MAIN CP)
FS CP
CO/TM
C
CO
D

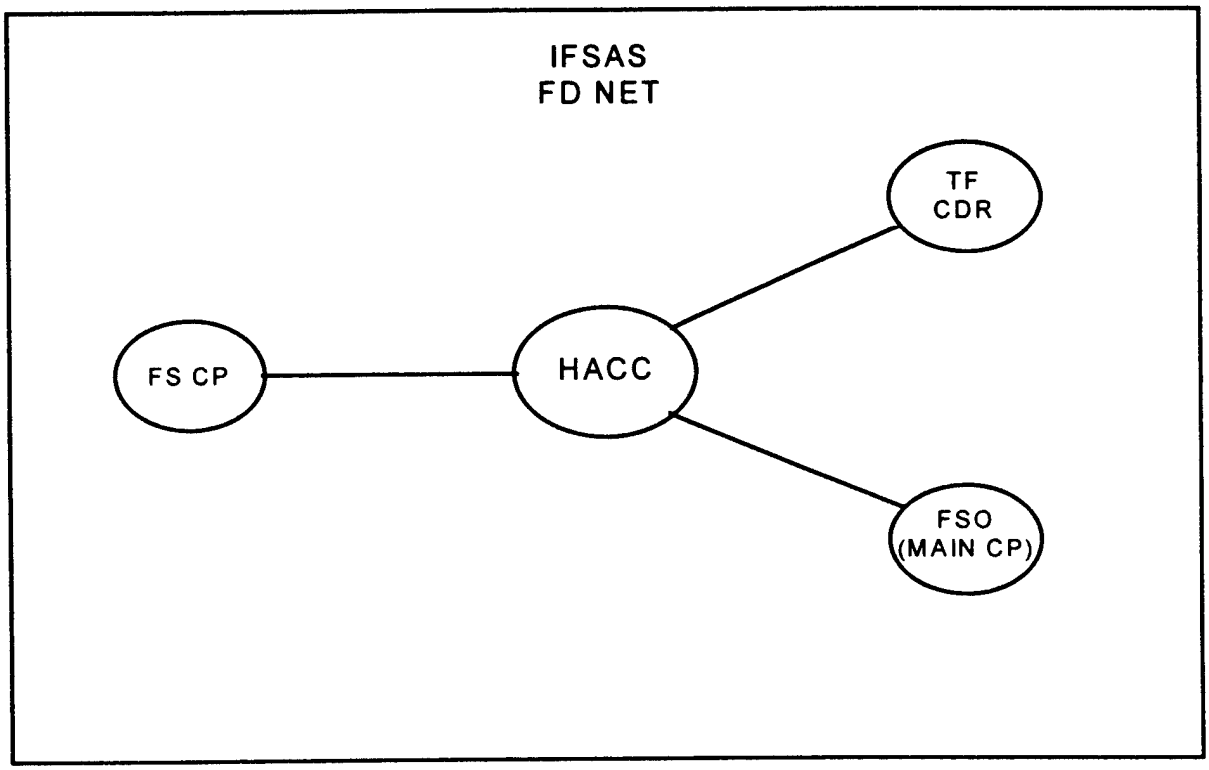
IFSAS
FD NET
TF
CDR
FS CP
HACC
FSO
(MAIN CP)

For simulation purposes, all digital nets were interconnected via ethernet with the exception of the TF B2C2 net. This network was interconnected via SINCGARS radios. There was a physical requirement to overcome a shortage of LAN cards that were integrated within the LCUs. The Brigade B2C2 net utilized an ethernet configuration where the interface with the SINCGARS network was at the TF TOC LCU. Here, channel 1 was reserved as the Brigade net (LAN card) and channel 2 was reserved as the TF net (TCIM card). Similarly, the TF IVIS net was interconnected by a LAN that utilized a Hub to route IVIS digital messages to all host workstations. The following diagram exhibits the IVIS LAN:

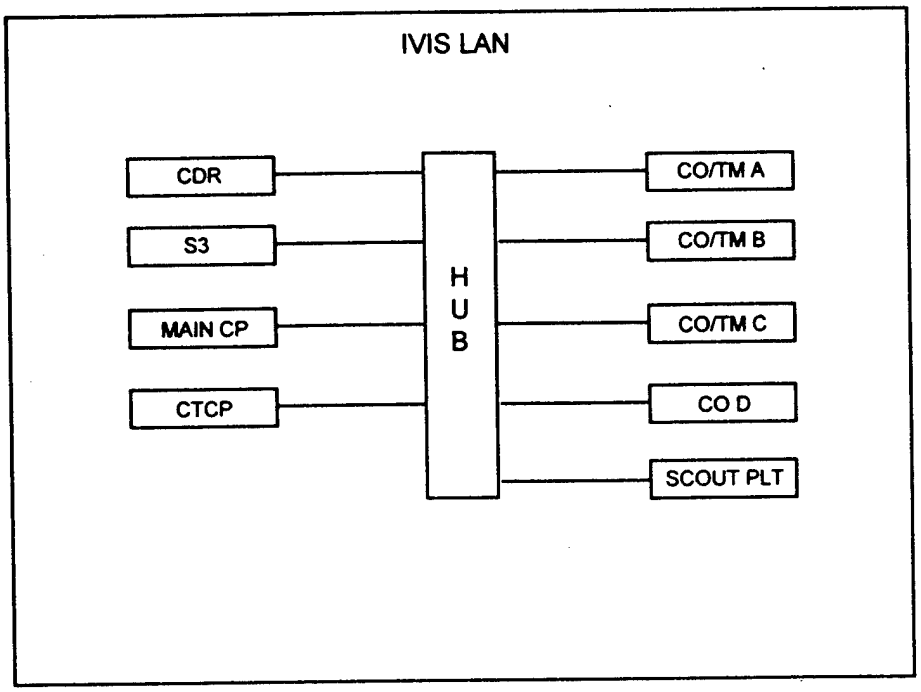

When an IVIS message is generated at any of the above workstations, the message will be routed through the Hub and sent to each of the other workstations that the message is intended. This is accomplished through Internet Protocol (IP) addressing.

APPENDIX C

Task Force and Observer/Controller Training Evaluation Questionnaire Data

This Appendix provides tables of frequencies and respondent comments (where they existed) for each question referenced in the Results and Discussion chapter. The Appendix contains responses for both O/Cs and TF participants and is ordered in accordance with the discussion presented in the Results and Discussion chapter. In keeping with the Privacy Act statements, the roles of comment originators have not been provided, as it would then be possible to identify the individuals making the comments.

O/C Responses

Seven O/Cs completed questionnaires. However, only five responded to the questions regarding Observation Forms as only five functioned as Observers.

Overall TSP Quality

1. How would you rate the quality of the training support package (e.g., did presentation format aid in navigation and understandability, did it contain errors, was the reading level appropriate?)

Rating	Frequency
1. Very Bad	0
2.	0
3. So-So	4
4.	3
5. Very Good	0

2. Were TSPs easy to use?

Rating	Frequency
Yes	6
No	1

- Volumes need to be broken into specific groups such as the books provided for the team during trials.
- What was given was OK.

3. Did the TSP information support your O/C/I responsibilities?

Rating	Frequency
Yes	6
No	1

- Satisfactory.
- Not enough personnel for FS.

4. Was the level of detail appropriate?

Rating	Frequency		
	DATK	DIS	MTC
Yes	3	3	4
No	4	3	3

- DATK - Intel from Bde/Division.
  -Amount of TF assets.
- DIS - Need to include a graphic overlay/map picture for each mission.
  -Need to add a DST.
  -Need to improve enemy Intel annexes.
- Again, all tasks related to digital specific need more detail. I understand that an MTP will solve this. OPORDs need more detail for a unit to accept ownership of this.
- Need DST or at least decision points.
- More personnel are needed for FS to accurately portray Bde and higher input.
- More Janus screens needed for overloaded FS station .

5. Were you provided the info you needed to conduct the mission?

Rating	Frequency
Yes	4
No	3

- The OPORDs lack detail for DIS and DATK
  -Eng
  -ADA
  -FS
- FS matrices, paragraphs, overlays, and target lists were not accurate, not updated, and did not change to reflect maneuver changes.
- Again, we are not digital gods.

Observation Forms

1. Did you understand the purpose of each form?

Rating	Frequency
Yes	5
No	0

- Didn't use them.
- See above comments. *[Reference is to lack of detail for observing TOC operations.]*

2. Were they easy to use?

Rating	Frequency
Yes	5
No	0

- But not really focused on above comments. *[Reference is to lack of detail for observing TOC operations.]*

3. Did the O/C Observation Forms adequately reflect the critical scenario events?

Rating	Frequency
Yes	5
No	0

4. Was the level of detail appropriate?

Rating	Frequency
Yes	3
No	2

- Besides: Did this info get sent? Did the TOC function as net control, etc? Need to focus on what the TOC does with info - i.e., Did the S2 update situational template. Were INTSUMs sent to higher and lower? Were recommendations in all BOSs passed to CDR? Was a central point of control in the TOC? Is the unit position and status correct? Is there cross talk, etc?
- Detail on digital use needs to be added.

5. Did they help you focus your coaching/teaching points?

Rating	Frequency
Yes	3
No	2

- Yes, but there are specific CSS events that happen but don't get executed because the unit becomes combat ineffective.

6. Did the forms support the development of AARs?

Rating	Frequency
Yes	3
No	2

7. How could the forms be improved?

- We need a standard log in order to accurately track the events by phase and in particular, game time.

AAR Development

Were you provided with the materials you needed to conduct digital AARs?

Rating	Frequency
Yes	1
No	6

- Need the ability to record digital traffic.
- No way to capture digital reports keyed to Janus game time.
- Need the ability to track/monitor digital traffic to see that portion of the fight O/C needs a digital station or means to see, simultaneously with the unit, digital traffic. This info can then assist the O/C in AAR process.
- Training on B2C2 - what it does - How to use it.
- An AAR poster should be developed along with a battlefield execution summary posted. Critical subtasks for digital specific tasks need to be more detailed.

Participation in Formative Evaluation

1. Did participation in the training missions make you aware of additional task areas where coaching will be useful?

Rating	Frequency
Yes	6
No	1

- The HACC needs to issue the higher order to the unit. Discuss COA and then go over the unit order with the unit.
- Cueing of Intel assets
- I realized that there needs to be a means to bring the digital information together for synthesis. This goes back to SOP in the TOC on data collection,

posting, analysis, and recommendations. The digital system is a tool but not the answer to making the TOC work. Too often, the people believe the digital works all, it doesn't.

- Having seen the missions executed, I became more aware of critical events where a clear intelligence picture can determine the success or failure of the TF. During these critical events, the proper use and focus of TF R&S assets is critical. If assets such as scouts or UAVs are expended too early, they obviously are not present for later events. It also became clear the TF S2 must be able to make a judgment on OPFOR disposition based on indicators rather than on confirmed "perfect" intelligence due to mission tempo.
- O/Cs would need detailed training in digital equipment use and capabilities to coach. Also, a MTP, specifically for digital units, needs to be developed.
- Use of digital reporting systems.
- Give technical assistance in order to ensure overall mission objectives can be completed.

2. How ready for the training missions was your unit **before** this week's training?

Rating	Frequency
1. Not at all Ready	0
2.	1
3. Somewhat Ready	1
4.	5
5. Completely Ready	0

3. How ready for the training missions was your unit **after** this week's training?

Rating	Frequency
1. Not at all Ready	0
2.	0
3. Somewhat Ready	1
4.	5
5. Completely Ready	1

Training Missions

1. How could the training missions be improved?

Deliberate Attack

- Need D.P.s for at least two COA.
- Provide the TF more combat multipliers to stress the staff (CAS and FS fires).
- Use of NBC.

- Require TF to actually pass follow on units.
- Stress consolidation and reorganization.
- Rewrite the order. Provide a clear and go to or better picture of the enemy. Incorporate a decision support template. Add other BOS elements, i.e.; More engineers, ADA, etc. Have the fwd passage happen, add the follow on unit, and push the issue. Reposition SBF positions to actually support the attack.
- The Intel buildup should have meaningful information. The TF S2 was advised of a combined arms reserve. A CAR is the lowest an element of an MRB, not MRC. Do not place distracters in the intelligence buildup.
- Rewrite OPORD so all FS conforms to maneuver missions/tanks.
- The entire OPORD needs to be fine tuned. There needs to be more detail. A forward aid station and main aid station needs to be added to Janus screen. The route for combat trains also needs to be fixed. AXPs need to be given in the Bde order and the use of a forward logistics element could be useful. Lanes need to be designated for east v. west movement.

Defense in Sector

- Insure Co/Tm positions are mutually supporting.
- Smaller sector or IDF support.
- Narrow the sector. Provide more artillery, defend using the passes - Brown/Debman as choke points to kill enemy instead of choke points where he kills you. Establish an engagement area that allows the TF to mass fires. Include other BOS elements - engineers, ADA, CSS, etc. - Develop and execute a counter attack.
- This is not a strictly intelligence issue but Blue is defending bad ground. OPFOR stand off tells the tale. Give Blue ground that makes sense and the mission is possible. With this ground its like storing water in cheesecloth.
- Defend using better terrain.
- Site obstacles in depth to force enemy into EA.
- See above, ref. FAS, MAS, AXPs.
- Use of NBC.
- See notes for DATK.

Movement to Contact

- Workable.
- The MEL list gives the TF info on facing the 218th - a BTR unit. Check MEL for inaccuracies. Also, dtg - time effective should be on messages. Build up should go longer than 2 minutes before mission start.
- AXPs need to be added.
- IDF support.
- Use of NBC.
- Same as DATK. Also, move Arty to cover TF Falcon's sector.

2. How could the scenario portion of the mission volumes be improved?

- I felt the scenario portions were very good.
- DIS and DATK volumes must reflect base SIMUTA/SIMBART scenarios. SIMUTA-D changes in OPFOR OB and assets must reflect a change in the overall Bde scheme of maneuver to ensure TF has the assets to meet the increased threat.
- MTC - Falcon should be given a higher priority of fires or engage BROMS.
- See above comments.
- Read all previous comments. Scenario needs to be fixed.

Task Force Responses

Twelve TF participants completed questionnaires. Only seven TF participants responded to questions regarding CP AARs as only this number staffed the CPs.

Training Events

1. Training events adequately exercised task conditions and standards.

Rating	Frequency		
	DATK	DIS	MTC
1. Strongly Disagree	0	0	0
2.	2	3	0
3. Neither	4	3	3
4.	6	6	8
5. Strongly Agree	0	0	1

2. What additional training conditions and standards, if any, are necessary for the digitized battlefield?

- Event checklist per digital system.
- Trained operators for the systems to free up the TOC decision makers.
- IVIS must fully work.
- Need better digital training simulators, that more accurately depict actual equipment.
- Must complete missions through reorganization phase. Can't call change of mission until all tasks are executed.

3. Training events exercised digital capabilities.

Rating	Frequency		
	DATK	DIS	MTC
1. Strongly Disagree	3	4	2
2.	3	2	1
3. Neither	5	5	5
4.	1	1	4
5. Strongly Agree	0	0	0

4. Are there new digital tasks that need to be addressed in training?

- TF digital takes OP discipline.
- Not sure yet but will know if we only worked one mission until all digital tasks were thought of and used.
- Del Def - we did not use IVIS to input platoon position and sector of fires. This info needs to be pushed higher so the staff and CDR can ensure he has enough killing systems massed on the battlefield. The IVIS-ICAT systems needs to be improved in order to be able to work the IVIS digital traffic.
- The systems need to support what we are asking them to do. For example, IVIS - ICAT can't support the graphics of a Del. Def. inputting POSNAV every KM is unrealistic especially if your fighting. What is more important?
- Training for each system (B Tm/2nd string) i.e., ASAS; IVIS; B2C2; IFSAS; FED; etc.
- Don't know.

Staffing

1. Your command area was appropriately staffed.

Rating	Frequency
1. Strongly Disagree	1
2.	3
3. Neutral	0
4.	8
5. Strongly Agree	0

- Bn CDR would like IFSAS and ASAS capability.
- Need more S2 staff so we can run ASAS.
- Asst S2 officer to man ASAS or provide an additional ASAS workstation.
- There is not enough space for all players in the maneuver unit cells.
- Add properly trained operators for IFSAS and FEDs.

2. How did the staffing of other command areas affect the performance of your command area?

- FSO was short and could not plan, execute, and clear fires.
- I brought extra people to assist because the layout of systems didn't facilitate any other way.

Coaching

During the mission, coaching and comments facilitated the conduct of staff tasks.

Rating	Frequency		
	DATK	DIS	MTC
1. Strongly Disagree	0	0	0
2.	2	2	2
3. Neither	6	7	6
4.	3	2	3
5. Strongly Agree	1	1	1

Scenario Materials

Did the OPORDs and graphics provide the information needed to execute the orders?

Rating	Frequency
Yes	10
No	2

AARs

CP AARs

1. The AARs focused on improving the **CP's** performance.

Rating	Frequency
1. Strongly Disagree	0
2.	1
3. Neutral	0
4.	6
5. Strongly Agree	0

2. The AARs addressed the application of digital equipment on the battlefield.

Rating	Frequency
1. Strongly Disagree	0
2.	4
3. Neutral	2
4.	1
5. Strongly Agree	0

3. The AARs helped my **CP** improve its performance.

Rating	Frequency
1. Strongly Disagree	1
2.	1
3. Neutral	1
4.	4
5. Strongly Agree	0

4. The **CP** AARs were beneficial.

Rating	Frequency
1. Strongly Disagree	0
2.	2
3. Neutral	1
4.	3
5. Strongly Agree	1

5. How could the CP AARs be improved?

- All missions: talk more about how the digital equipment should/could be used -which system to use for what; when to use them.
- Talk more to digital.
- Yes, in relationship to TTPs. No, in relationship to digital application. There was no way to capture the digital information pass. It became another event for the training unit to do and record. Janus can do play back. Digital systems cannot.
- O/Cs need a better way to monitor all of the digital usage during a mission. That way they would be better able to address digital subjects in AARs.

Task Force AAR

1. The AARs focused on improving the **TF's** performance.

Rating	Frequency
1. Strongly Disagree	0
2.	2
3. Neutral	0
4.	10
5. Strongly Agree	0

2. The AARs addressed the application of digital equipment on the battlefield.

Rating	Frequency
1. Strongly Disagree	1
2.	5
3. Neutral	3
4.	3
5. Strongly Agree	0

3. The AARs helped the **TF** improve its performance.

Rating	Frequency
1. Strongly Disagree	0
2.	0
3. Neutral	4
4.	8
5. Strongly Agree	0

4. The **TF** AARs were beneficial.

Rating	Frequency
1. Strongly Disagree	0
2.	0
3. Neutral	5
4.	7
5. Strongly Agree	0

5. How could the Task Force AARs be improved?

- Focus on CHEVY phases - LD/CR/MB/CSS.
- Do by:

BOS	ex: Intel (Higher, Sct, Cdrs)
Dig system	ex: ASAS, IVIS, B2C2, FM
Cdr, staff (C2) (Man)	ex: Sct, S2, XO, Cdr/S3, FA, TOC, Man

- A. Task use of UAV. B. LD phase. C. BOS. D. Sys. E. Cdr/staff.
- If a unit feels like its been set up for failure, they will psychologically refuse to learn anything just to get even. This happened too much.
- We need to address the use or lack of use of all digital systems. What and when digital traffic should be sent, on which system.
- Same as Command Post AARs.
- Same as previous.

Training Benefit

1. After participating in the training, I am better able to apply digital equipment on battlefield.

Rating	Frequency
1. Strongly Disagree	0
2.	4
3. Neutral	7
4.	1
5. Strongly Agree	0

2. How proficient was your battalion in the digitized battlefield **BEFORE** this week's training?

Rating	Frequency
1. Not at all Proficient	0
2.	0
3. Somewhat Proficient	4
4.	7
5. Completely Proficient	1

3. How proficient was your battalion in the digitized battlefield **AFTER** this week's training?

Rating	Frequency
1. Not at all Proficient	0
2.	0
3. Somewhat Proficient	2
4.	9
5. Completely Proficient	1

4. Were there any aspects of the simulation/digital devices that limited the training benefit?

- IVIS, RAM resulted in the overuse of B2C2 for C2 versus IVIS. We need IVIS RAM upgrade for user confidence and reduction of the IVIS crashes.
- IVIS was a no go. We took a step back on IVIS. TIC configuration not good enough if using digital equipment. Must be tight together and in proper sequence to allow for visual eavesdropping by station beside you. Head phones would help but only if all stations could hear everybody else's station, as well. Battle Captain needs headphones, as well.
- Lack of equivalent systems (IVIS, FM nets, etc.).
- More robust/functional IVIS.
- IVIS cannot automatically update vehicle location.
- IVIS ICAT does not allow options of real IVIS.
- IVIS - ICAT can take the load of traffic that can and needs to be sent.
- IVIS - ICAT does not accurately reflect IVIS's capabilities.
- Digital systems did not accurately reflect actual systems.
- BDA information on Janus terminal must improve. Suggest printer with BDA data.

5. Please specify any training needs that were not met:

- Not enough emphasis on the digital equipment and procedures. The IVIS is not good enough to use. Need UAV photos on ASAS and maybe some filtered JSTARS photos on data.
- Digital intelligence functions - did hit conventional tactics and plans.
- Use of digital systems.
- Recording of digital traffic. I evaluated myself not realistic.
- Lack of a function IVIS disturbed distracted from the training.
- No properly trained personnel for IFSAS or FEDs were available.

Training Missions

1. How could the training missions be improved?

Deliberate Attack

- Call me for an appointment.
- Must synchronize the graphics with the OPORD. I would recommend only doing 1 mission until you have worked out all the digital tasks that need to be done and when to do them and how best to do them.
- Doomed plan. OPFOR has better weapons, intel, C2 and more flexibility. How can anyone pull this off?
- Use the SIMUTA OPORD, not this new one.
- The sweep from the left doesn't work well because it requires you to mass the task force on the far side of the objective. It would be easier to conduct a turning movement.
- Everyone dies and change of mission given. No consolidation and reorganization because TF is obliterated.
- Even the engagement ranges by using T-72s.
- Needs to follow FS 71-2. We did not and could not from following order separate the enemy and defeat him a platoon at the time. Coming on line after going through the southern pass to sweep from W to NE is unreal. We expose our flank to the enemy. We should do this in a leap frog method.
- This mission is ASAS heavy in potential. Imagery from higher can provide real digital info. over ASAS. The potential products need to be beefed up to drive digital info or ASAS. -Better enemy Sit Temp. -DST. -Event Temp. -R&S UAV deployment.
- More use of ASAS to give the 75-90% solution.
- FS - more detailed plan including triggers for smoke targets, duration, linear smoke targets, etc. Accurate target plotting/refinement. Execution matrix as a stand alone document. Primary and alternate shooters for each target. Accurate ammo available. An overall more detailed plan.
- What is evaluated. Yes task, condition, standard from the MTP, but this is digital. What do you expect a unit to be able to do digital in this scenario. It's not who shot John. We are planning to use digital equipment, not TTPs.

Defense in Sector

- Call me for an appointment.
- Use the SIMUTA OPORD. This one does not work well.
- Must synchronize the graphics with the OPORD.
- Change graphics to provide mutually supporting sectors of fire.
- Same as DATK. ASAS intel products need to be beefed up and made more robust. Stars finds large globs such as MRR attacking. ASAS is only good as the info being

driven in. Annex B and the R&S plan need to be adapted for digital. DST. Enemy Sit. Event Temp. UAV. Employment.

- Need to narrow sector or fight further east. The order requires you to tie down company in economy of force and D Co in reserve. This means the task force can never man more than two companies against the regiment.
- Can't mass 3 companies of fires in EA. No time to displace back to subsequent BPs.
- Exercise the CSS portion more after the defense. Via B2C2 reports of battle damaged vehicles and resupply of Class III & V.
- See DATK, especially triggers for the enemy as they hit the targets reinforcing the obstacles.
- Systems can't support what is needed. Graphics. Radio nets, etc.
- Same as previous.
- Same as above.

Movement to Contact

- Good. All 3 conventional. Orders <u>not</u> digital. They have no digital integration of tasks for CDRS or staff.
- Best mission. Both sides have same limitations.
- Good product overall although good intel makes this mission a DATK or hasty defensive mission.
- Good order.
- Best mission to use digital platforms.
- No change.
- Must synchronize the graphics with the OPORD.
- See DATK. Also, have FA fires available even if not priority - fires still should be available.

<u>Overall Comments</u>

- Use SIMUTA conventional orders graphics.
- Develop matrix checklist to get at Digital data across. --BOS, System, Cdr/Staff, Task, Event per phase of each mission.
- Fix the IVIS problems. 1st Cav Division personnel will expect to have a fully functional IVIS system. The area station trainers at Fort Hood can network and have the updated software unlike this IVIS. Digital units must use the IVIS system or SIMUTA-D is just like plain old SIMUTA.

APPENDIX D

Rationales for Observer/Controller and Task Force Recommendations Not Implemented

Table 9 Comments

Table D-1

Rationales for O/C Comments not Implemented in Table 9

MISSION COMMENTS	RATIONALES
Common to all Missions	
Improve FS materials and information to better support maneuver missions	Current FS materials are based on established materials from SIMUTA programs and comment does not reflect insertion of digital devices.
Deliberate Attack	
Provide alternatives for 2 courses of action.	SIMUTA-D scope and resources allow for execution of a single course of action only.
Require TF to pass follow-on units.	Not realistic due to timeline of current scenario.
Add NBC.	NBC is not a task that lends itself to simulation-based training. (Burnside, 1990, pp. C21-C23)
Defense in Sector	
Provide smaller sectors.	Doctrinal distances for the battalion TF were expanded because of the enhanced situational awareness provided by the digital capabilities of the battalion TF. Also, 4 to 5 kilometers of the frontage assigned to the battalion TF were slow going terrain in the Colorado WADI which permitted only an MRC size force to pass through. Tests subsequent to the Level 4 trial have proven the validity of assigned sectors in stopping OPFOR.
Develop and execute a counterattack.	Disposition of BLUEFOR and the high probability of hit/kill of the OPFOR do not favor a counterattack.

Table D-1 (Continued)

Rationales for O/C Comments not Implemented in Table 9

MISSION COMMENTS	RATIONALES
Provide more artillery.	Depending upon METT-T, a brigade TF could expect to receive DS artillery support, in the form of fires from one artillery battalion. Based upon the Brigade Commander's intent, this battalion TF did not have priority of fires. There was a 24 gun artillery battalion available to provide fire support to the battalion based upon the limitations imposed by the HACC.
<u>Movement to Contact</u> Provide indirect fire support.	The TF is not the main in the brigade MTC. There is artillery available south of the TF which will provide indirect FS on an as available basis.
Use NBC.	See Deliberate Attack.
Move artillery to cover Falcon sector.	Artillery is available south of the TF and should be provided by the O/C/I on an as available basis.

Table 11 Comments

Table D-2

Rationales for TF Comments not Implemented in Table 11

MISSION COMMENTS	RATIONALES
Common to all Missions	
Provide more detailed FS plan.	With additional time there are improvements to the FS plans that could have been made. However, the current FS plans do meet the operational requirements for each mission. The SIMUTA-D FS plans were based on established materials from previous SIMUTA programs.
Deliberate Attack	
Sweep from left does not work, better to conduct a turning movement.	Scheme of maneuver is doctrinally correct as depicted in the battalion TF order. Adjustments have been made the Janus database which more closely aligns simulation capability with actual Blue/Red capability. The overstatement of OPFOR capability and the understatement of blue capability (probability of Hit, probability of Kill, maximum line of sight, etc.) were largely responsible for the lack of Blue success and not the scheme of maneuver.
Re-write order, as it does not allow TF to separate the enemy and defeat him a platoon at a time; flank is exposed.	See above rationale.
Movement to Contact	
Intelligence changes needed.	Intelligence, as portrayed in the Brigade and TF orders and message traffic, portrays a less than clear enemy situation which is desirable for a MTC mission. Although concerns were expressed that the intelligence assets provided too much information, the MTC mission is operationally supported.